MANUAL
EDU 2AE/TOP - EDU 2AE/TOP/E - EDU 2AE/TOP/TA
Torque range: 0.35-70 Nm

IDENTIFICATION DATA OF THE MANUFACTURER

KOLVER S.r.l.
VIA M. CORNER, 19/21
36016 THIENE (VI) ITALIA

IDENTIFICATION DATA OF THE PRODUCT

MODEL:	EDU 2AE/TOP	EDU2AE/TOP/E	EDU2AE/TOP/TA
CODE:	032000/TOP	032000/TOP/E	032000/TOP/TA

TECHNICAL DATA OF THE PRODUCT

FUSE: 3,15 A
DIMENSIONS: 190 x 205 x h120 mm WEIGHT: 2,5 Kg

DECLARATION OF CONFORMITY

CE

KOLVER S.r.l. declares that the new tool here described: control unit model EDU2AE/TOP and EDU2AE/TOP/TA is in conformity with the following standards and other normative documents: 2006/42/CE, LVD 2014/35/UE, EMCD 2014/30/UE, EN 62841-2-2:2014, EN 62841-1: 2015, EN 60204-1, EN 61000-6-2, EN 61000-6-4.
It is also in conformity with RoHS III normative (2011/65/UE and following 2015/863).

Name: Giovanni Colasante
Position: General Manager
Person authorized to compile the technical file in Kolver

Thiene, January 1st 2021

Giovanni Colasante

EDU 2AE/TOP power supply and control units are an innovative system for controlling the torque of any current control MITO and PLUTO electric screwdrivers: MITO15, PLUTO 3, PLUTO 6, PLUTO 10, PLUTO 15, PLUTO 20, PLUTO 30, PLUTO45, PLUTO50 and PLUTO70, either inline, pistol, push to start, for automation and with angle head (only PLUTO).

EDU 2AE/TOP delivers all the advantages of precision torque control electric tools at a fraction of the price of transdurized tools.
The state-of-the-art electronic control circuit cuts the power supply to the motor calculating the correct torque in response to 3 parameters; voltage, frequency and current, according to the selected options.
The AC 90÷260V - 50÷60Hz power supply is converted into 40VDC required by the PLUTO series screwdrivers through a switching board.

Torque setting		Model	Torque (Nm)	Speed (rpm)	
Unit	%			Min	Max
✓	✓	MITO15	0,35-1,5	450	850
✓	✓	PLUTO 3	0,5-3	370	1300
✓	✓	PLUTO 6	0,85-6	200	850
✓	✓	PLUTO 10	1.5-10	110	600
✓	✓	PLUTO 15	2-15	60	320
✓	✓	PLUTO 20	3-20	50	200
✓	✓	PLUTO 35	3-35	40	140
✓	✓	PLUTO 50	5-50	20	90
✓	✓	PLUTO 3 ANG	0.5-2.5	370	1300
✓	✓	PLUTO 6 ANG	1-6	200	850
✓	✓	PLUTO 8 ANG	1,5 - 8	110	600
	✓	PLUTO 15 ANG	2-13	100	320
	✓	PLUTO 20 ANG	3-18	60	200
	✓	PLUTO 30 ANG	6-30	30	130
	✓	PLUTO 45 ANG	10-45	20	90
	✓	PLUTO 70 ANG	15-70	20	50

IMPORTANT: EDU 2AE/TOP is a highly accurate unit but it is critically important to select the correct options to ensure that proper torque is being applied. Read the menu description carefully and in case you are unsure please contact Kolver for support information.

The EDU 2AE / TOP control units can be set in two operating modes:

•%: the tightening and unscrewing torque values are set through a percentage;

• #: the tightening and unscrewing torque values are set directly as the desired value and in the selected unit of measurement.

Turn the unit on through the on/off switch on the back panel. The unit will carry a general system check and the words "*waiting connection*" will appear on the last line of the display. If the connection with the motor control board is successful the following screen will be displayed:

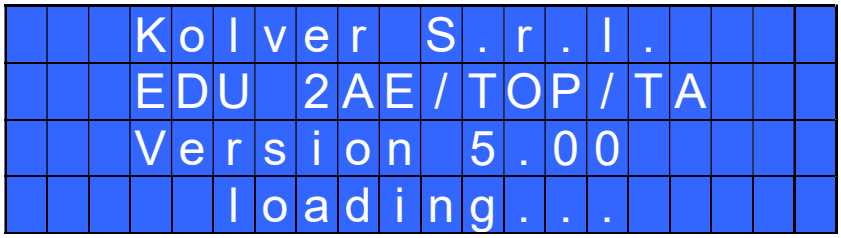

When turned on and the screwdriver is connected, the unit is set to % mode and the display will contain the following information:

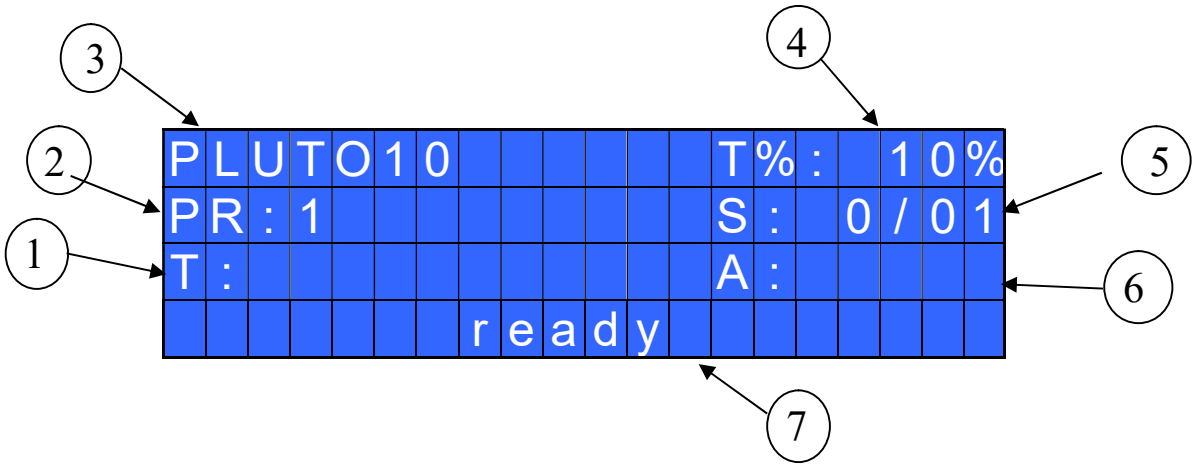

1- Reached torque level in Nm, lbf.in or kgf.cm (in % mode, only if *Show Torque* function is active)
2- Program number or sequence
3- Screwdriver model
4- Torque level in percentage
5- Screw count: done screws/total screws
6- Angle value in degrees (only EDU 2AE-TOP TA model)
7- Status bar (ready, errors, etc…)

FRONT PANEL KEYBOARD

To enter the menu press the **ESC** key for 2 seconds.

Select the line by pressing ⇧ or ⇩ then press **OK** (the symbol ➔ will turn into ⮆). Press the ⇧ or ⇩ to select the required value and then confirm through **OK** (or **ESC** if you don't want to save the value).
The selected values will be immediately operational, even if you are still in the menu screen. Repeat the sequence for all the parameters you wish to change and then push **ESC** to return to the main screen.
Press **RESET** for 3 sec should you need to reset the screw, the program or the sequence. If you want to see all the set parameters press ⇧ for 2 seconds, however you cannot modify the displayed parameters on this screen.

LEDS ON FRON PANEL

GREEN LED VERDE: indication of *Screw OK*.

YELLOW LED: indication of *Programm End* or *Sequence End*.

RED LED: any indication of error.

MAIN MENU:

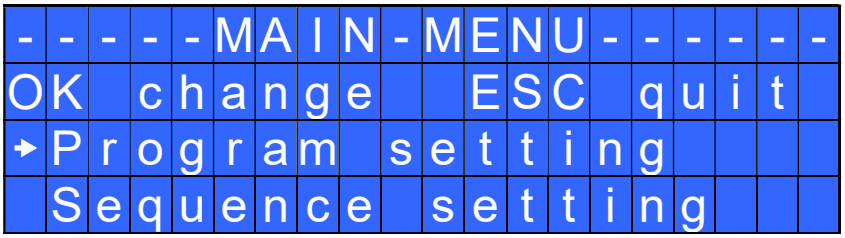

Program setting: It indicates the menu section where you can set or modify the fastening parameters.

IMPORTANT: To work with switch box, socket tray and remote it is mandatory to go to Sequence Menu (Ext Box: ON).

Sequence: It indicates the menu section where you can activate the sequence, the switchbox/socket tray and the bar code.
NB: It is not possible to set a sequence containing programs both in % and in # mode. See the dedicated Section.

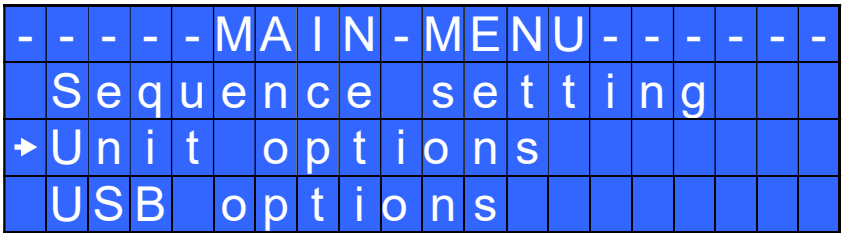

Unit Options: It indicates the menu section where you can set date the language, the password, the unit, the buttons, the unit mode, date and time, the firmware version, the serial number and the cycles done.

AVAILABLE ONLY ON EDU2AE/TOP/E and EDU 2AE/TOP/TA (from 3.0 version on)
USB Options: It indicates the menu section where you can view, upload and create programs setting of the control unit.

PROGRAM MENU:

The first 28 menu lines are available in both the EDU 2AE/TOP, EDU 2AE/TOP/E and EDU 2AE/TOP/TA models.
Lines from 29 to 32 are only available in the TOP/TA model.

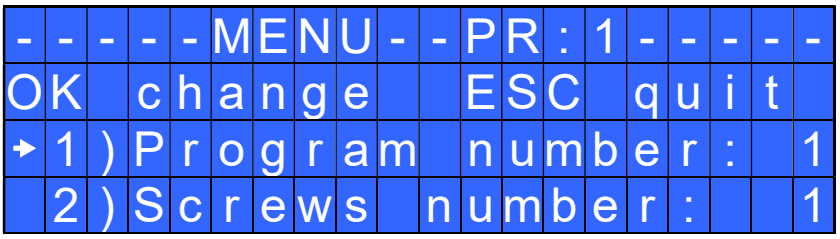

1) Program number: you can select/ modify the desired program from 1 to 8.

2) Screws number: The EDU2AE/TOP can act as screw counter. You can set the number of screws from 1 to 99. To disable the function press ⇩ until you get to OFF.
If the number of correct screws matches to the number of set screws, "*PROGRAM END*" will appear on the status bar and the yellow led will light up. If the "*Press OK*" is ON (see point 18), "*PROGRAM END*" will

automatically disappear at next screwing or any time you enter the menu. Otherwise, press OK at the end of each program.
ATTENTION: Every time you enter the menu, the number of screws will reset.

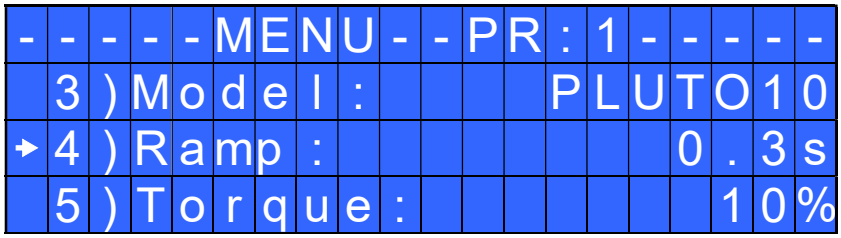

3) Model: you can select the screwdriver to be used. Your choice will automatically change the default settings. It's important to select the correct model you're going to use since most parameters regarding the motor software are specific to every single model.

In the # mode, the models that can be selected are: MITO 15, PLUTO3, PLUTO6, PLUTO10, PLUTO15, PLUTO20, PLUTO35, PLUTO50, PLUTO 3ANG, PLUTO 6ANG and PLUTO 8ANG. In this mode, once chosen a screwdriver model, a speed and tightening torque will be automatically set in an intermediate value between those available. While in reverse, torque and speed values will be set at maximum.
Also in the # mode, if the *Model Detect* is set on auto and no screwdriver is connected, it won't be possible to set any torque value or speed.

IMPORTANT: To work with CA drivers, switch box, socket tray and remote it is mandatory to select ON on Ext. Box in Sequence Menu.

4) Ramp: You can select the slow start time (acceleration) from 0.2 to 3.0 sec. This option is only available for the screwing phase, while during the unscrewing phase the ramp time is always 0.2 sec. We suggest using this option with self-tapping screws.

ATTENTION: Reaching the torque while the ramp is still on could give as result a different torque level from the one that results when the ramp is over. This is due to the motor acceleration.
Reaching the torque while the ramp is still on will activate the "screw OK" signal anyway (this option is useful if you need to tighten screws that are already tightened, the so called "double hit").
On the other hand, if you wish to see an error signal during the preset torque in the ramp phase, you can change the minimum time by setting value which is equal or superior to the ramp value (see point 7).

5) Torque: you can select the desired torque as a percentage of the torque range of the selected screwdriver. For example, for a Pluto10, a 50% setting will result in a torque in the area of 4 -5 Nm. The torque range is always referred to the MAX speed. In case you're not working at maximum speed, the torque range will progressively lower in order to avoid motor stalling. If the torque level is reached correctly, it will be displayed and you will hear a beep sound, too.
Such torque level is indicated as "T: ..% " on the main screen.

In # mode, the desired torque value is set automatically. This value depends on some tables which show a range of selectable torque values for each speed (see page 18). Therefore, for each speed it is possible to set a torque value between the minimum and maximum indicated. The torque range available will be displayed also on the main screen. If you want to set a torque value outside the range of that speed, you will have to increase or decrease the speed value in order to get a range of values the desired one is contained in.

6) Compens – Compensation: This function allows an increase or decrease of the displayed torque value after a calibration. The available range is from 0 to ±55 Nm. For example: after calibration (see Torque calibration) you make a screwing on your assembly and compare the displayed value to the value you see on a torque tester (for example a mini-K or a K model). Let's say you notice that the torque displayed in the unit EDU 2AE/TOP is +0.2 Nm higher than the value indicated on the tester (which is the right one). In this case you can modify this value by setting -0.2 Nm so that the value on the display will be the same as the value on the tester. If it's lower than 0.3 Nm, you need to set +0.3 Nm and so on.

In # mode, this function is used to increase the torque accuracy in tightening. If a tightening value is checked through a torque meter (for example a K or miniK model) and you notice a deviation between this and the target value or the one on the unit display, you can intervene by adding an offset (positive or negative) through compensation.

ATTENTION: the torque target value added to the compensation must in any case be contained in the torque range relating to the set speed. Any invalid value will be signaled with "*Torque/ speed error*".

7) Tm Fast Spd (Time Fast Speed): It indicates how long the screwdriver should turn at the FAST SPEED (see point 7) before switching to the Final Speed.
This Fast Speed Time can be set from 0.3 to 10.0 sec.
To disable the function press ⇩ until you get to OFF. In this case the screwdriver will automatically start at pre-set speed (see point 8).

CAUTION: The aim of the FAST SPEED is only to speed up the approach time in case of long screws. Reaching the torque at higher speed will result in inaccurate torque output. To avoid inaccurate torque values we suggest first to set a shorter time, and then increase it.
Torque reached during the FAST SPEED won't activate the torque signal and the message "*Error FAST SPEED*" will be displayed on the main screen and 2 beep sounds. The red led will turn on, too.

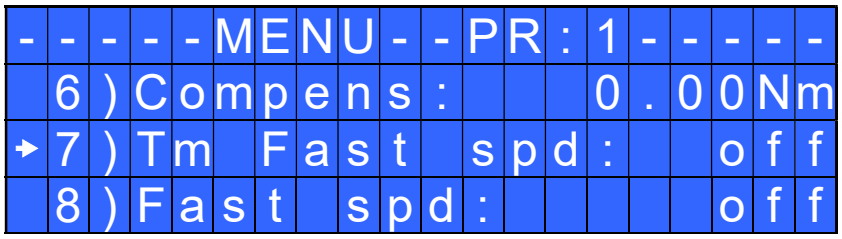

8) Fast spd (Fast Speed): You can select the speed of the screwdriver during the FAST SPEED. It can be set between max speed and the Final Speed (see point 8).
This function is available only if the Fast Speed Time is ON.

9) Final Spd (Final Speed): You can select any speed value of the screwdriver between nominal (maximum speed given in the catalogue) and the minimum speed of every single screwdriver (see table with technical data).

In # mode, the speed is also linked to the relative table of the screwdriver in use. It is therefore not possible to select a speed not included in its torque range. In this case, the error "*Torque/speed error*" will appear and it will not be possible to exit the speed setting until a correct speed has been selected. To switch from one speed to another, it will be necessary to set a torque value in common for each of the two ranges.

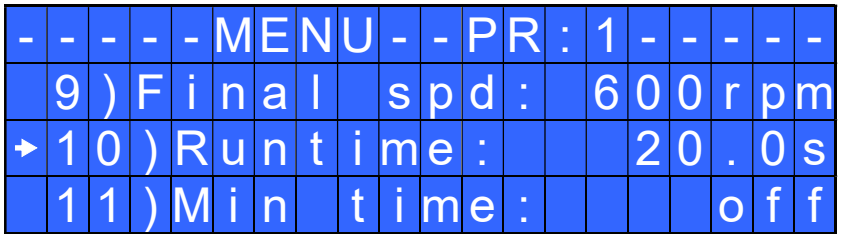

10) Runtime: You can set the time of a tightening, from OFF to 20.0 sec. When the pre-set time has been reached, it results in a torque signal.
The couple reached during this time results in a signal of *Correct screw*. If the correct screw signal is not required, set the Minimum time up to a value of 'Minimum Time -0.1sec'.

ATTENTION: Max Time must be set at 20.0 sec.

11) Min time - Minimum Time: You can select the minimum time of screwing from 0.1 sec to 'Max time - 0.1s'. To disable the function press ⇩ until you get to OFF (Min time = 0).
Torque reached below the minimum time won't activate the torque signal and will result in an error signal. "*Below minimum time*" will be displayed on the status bar and the red led will light up. You will hear two beep sounds, too.

12) Max time - Maximum time: You can select the maximum time of screwing. You can set from 'Min time + 0,1s' to 20.0 sec.
You also can set the Maximum time to OFF by pressing the ⇧ button when you have reached the value of 20.0s. In this case the screwdriver turns without any time limit.

ATTENTION: If torque isn't reached by the maximum time, the screwdriver will stop. "*Over maximum time*" will be displayed on the status bar and the red led will light up. You will hear two beep sounds, too.

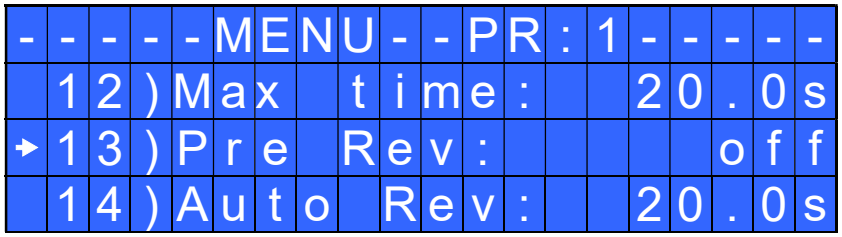

13) Pre-Rev.: pre-reverse. You can unscrew before tightening. This time can be set from OFF to 20.0 sec.

N.B. The speed and torque will be the same as those for the Auto Reverse.

14) Auto rev. – Auto reverse: This option will automatically start a reverse after a torque reached signal. You can set time from 0.1 to 20.0 sec.
To disable the function press ⇩ until you get to OFF.

ATTENTION: During the reverse, it is necessary to keep the lever or the start signal pressed as long as it doesn't stop. "*Correct screw*" will be displayed on the status bar and a green led will light up. You will hear one beep sound, too. In case the lever is released before the end of the reverse, "*unfinished screw*" will be displayed and a red led will light up. You will hear two beep sounds, too.

15) Rev spd - Reverse speed: You can select any reverse speed value of the screwdriver between the maximum and the minimum specific speed of every single screwdriver (see table with technical data).
In Unit mode, even the reverse speed is linked to the relative table of the screwdriver in use. At each model change, this speed will be automatically set at its maximum.

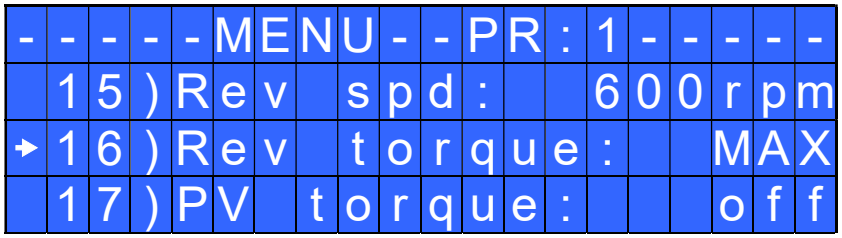

16) Rev torque – Reverse torque: You can select the desired reverse torque as a percentage of the torque range of the selected screwdriver (see point 2). If the torque is set on MAX, the reverse torque is about 20% higher than the possible maximum torque, so that it is always possible to unscrew a tightened screw (we suggest leaving this function on in normal use). If the setting is from MIN to 99% the reverse torque with the same percentage will be equal to the settings of the screwing phase.

In Unit mode, the desired reverse torque value is set automatically. At each model change, the torque will be automatically set at its maximum, so that the closed screw can always be unscrewed.

ATTENTION: **If you're using open-end wrenches, the reverse torque has to be set to MIN value in order to bring the wrench back to the correct position.**

17) PV torque: Period of time in which the screwdriver works at **maximum torque** before switching to the torque that has been set by the user. You can set time from 0.1 to 10.0 sec.
To disable the function press ⇩ until you get to OFF.
This function overlaps other time settings (Fast Speed, ramp time, minimum time, maximum time) from the motor start on.

ATTENTION: This function is useful for applications where the prevailing torque is higher than the final torque (for example trilobal screws or locknuts).
Please use this function with utmost attention because an incorrect use can damage both the assembly and the screwdriver.
Torques reached during the max torque time won't activate the torque signal. "*Error pvt time*" will be displayed and the red led will light up. You will hear two beep sounds, too.

18) Rotation: You can choose between right tightening (standard screws) or left tightening (left threaded screws). All the other functions will adapt to the selected direction of rotation.

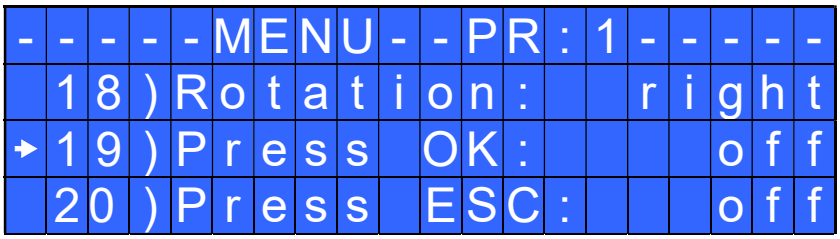

19) Press OK: when ON, press OK at the end of each screwing.
When OFF, the control unit resets automatically after a screwing.

20) Press ESC: when ON, press ESC to reset the control unit.
When OFF, the control unit resets automatically after an error signal.

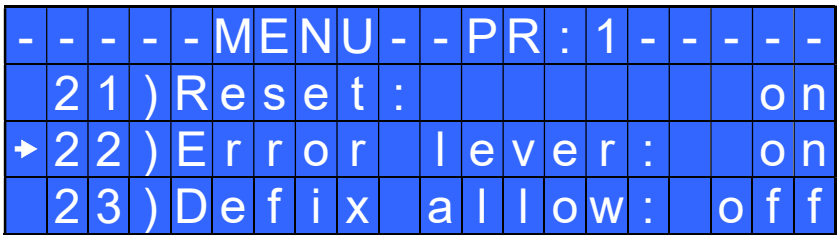

21) Reset: you can reset the program or the single screw.

22) Error lever: when ON, an error signal will occur when the lever has released before reaching the torque.
When OFF, this function doesn't work.

23) Defix allow: when OFF, the reverse is NOT enabled.

24) Show Torque: When ON, you will see the torque value (Nm or in.lbs) on the main screen.
When OFF, the torque value won't be displayed.
(To modify the calibration parameters see paragraph *Torque calibration*).

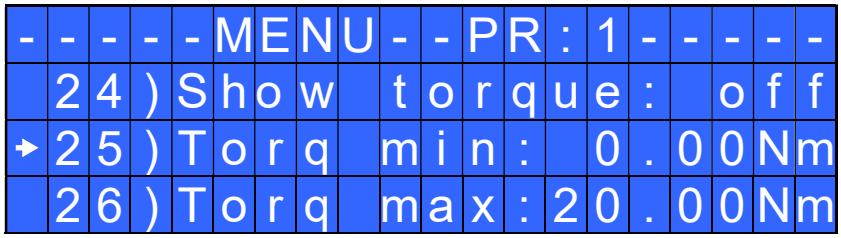

25) Torq min – Minimum torque: The minimum torque and maximum torque options allow the user to set the acceptable torque range for each single application. When the reached torque is within this range, "Screw OK" will be displayed on the status bar and the green led will light up. If the reached torque is outside this range, "error minimum torque" or "error maximum torque" will be displayed and the red led will light up. You can set the torque range from 0 to 'Torq Max-0.01 Nm' in steps of 0.01 Nm.
The minimum torque option allows to set the lowest value of the torque range. When Calibration is OFF, the minimum torque value automatically sets on 0 Nm.
The selection of the torque value is carried out by entering the digit cell by cell.

26) Torq max – Maximum Torque: The minimum torque and maximum torque options allow the user to set the acceptable torque range for the single application. When the reached torque is within this range, "Screw OK" will be displayed on the status bar and the green led will light up. If the reached torque is outside this range, "error minimum torque" or "error maximum torque" will be displayed. You can set the torque range from 'Torq Min+0.01 Nm' to 55 Nm at intervals of 0.01 Nm.
The maximum torque option allows to set the highest value of the torque range. When Calibration is OFF the maximum torque value automatically sets on 55 Nm.
The selection of the torque value is carried out by entering the digit cell by cell.

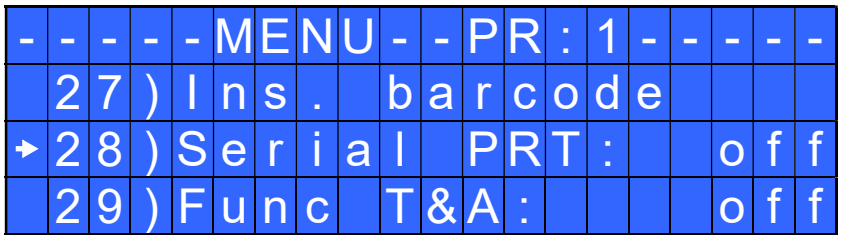

27) Ins. barcode: to scan a barcode and recall the desired program. To be used in combination with option 4. of the Sequence Menu.
IMPORTANT: Barcode can be ONLY numeric.

28) Serial PRT: Serial print: from OFF to 5.
When OFF, no print.
If it is set up to 5, this value identifies the number of line feeds between a string and another.

THE FOLLOWING MENU IS AVAILABLE ON T&A VERSION ONLY

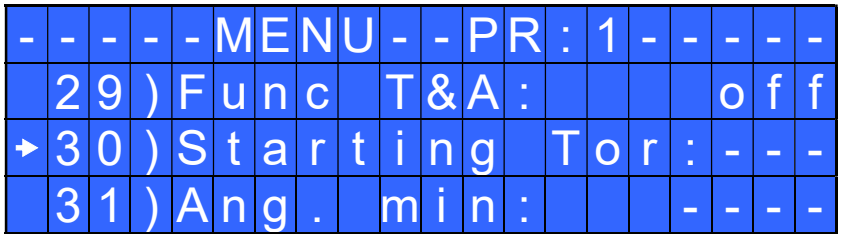

29) Func T&A–T&A function mode: You can activate the Torque & Angle function. Set OFF when you don't need this function. When you set ON you can choose among six working conditions (see T&A specific instructions).

30) Starting Tor – Starting torque: If T&A option is set on Tor mode (See T&A paragraph), you can set the torque threshold the angle starts to be read from. When T&A is set on angle mode (see T&A paragraph), you can set the torque threshold the angle starts to be carried out from.
In # mode, the torque threshold must be included in the range of values relating to the pre-set speed and model.

31) Ang. min – Minimum angle: Minimum angle threshold. You can set it when T&A is set on Tor, T/in or T/lv (see T&A specific instructions). The minimum angle the operator can set is 5°.

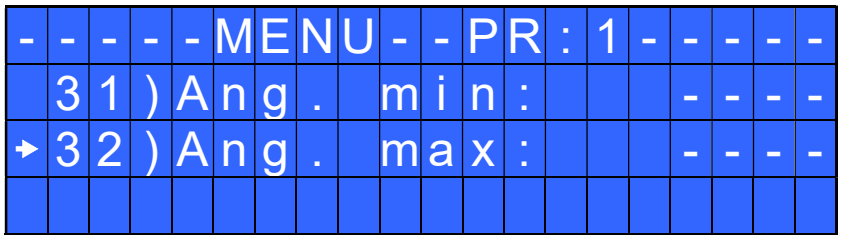

32) Ang. max - Maximum angle: Maximum angle threshold. You can set it when T&A is set on Tor, T/in or T/lv (see T&A specific instructions). The maximum angle the operator can set is 29999°.
When T&A is set on Ang., A/in or A/lv mode, maximum angle corresponds to the angle that has to be carried out.

SEQUENCE MENU:

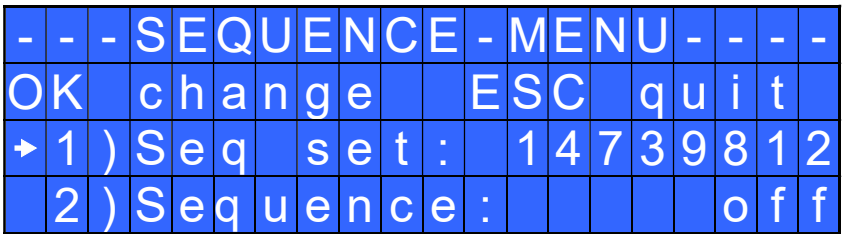

1) Seq set: you can set a sequence up to max. 8 programs.
To set the next program in the sequence, press OK.
Press ← to save the sequence and quit.
To set the programs of a sequence, it is suggested to set the *Model Detect in Manual* and manually select the desired screwdriver model for each program. Then enable automatic recognition. If you select a program which does not have a screwdriver model set (----), the *Select model* warning will appear and this setting will be exited.

2) Sequence: to enable or disable the sequence. ON = enabled; OFF = disabled.

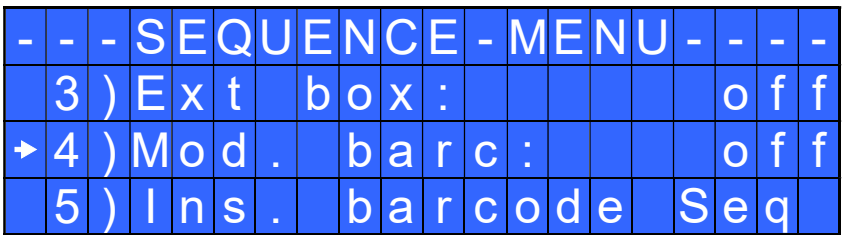

3) Ext box: It allows to enable or disable the external control.
IMPORTANT: It is **mandatory** to select ON to work with switch box, socket tray and remote.

4) Barc. mode: – Barcode mode: It allows to choose the barcode mode.

- **OFF:** barcode disabled.
- **ON prog:** you can select the program to be executed by scanning the bar code of the product. The unit compares the scanned code to the one previously entered in each program (see point 27: Barc. Set.). If the two codes match, the program is loaded; otherwise it will display *Error Barcode*. The

scanned product code is also printed on the serial port of the control unit (see paragraph "*serial print*").

- **ON S.N.:** the product code is required before running a program or a sequence. The product code is printed on the serial port of the control unit.
- **ON Seq.**: you can set the Sequence by scanning its barcode. The code scanned is compared with the sequence entered in the menu (see point 5: Ins. Barcode Seq on Menu Sequence). If the two codes match, the sequence set is loaded, otherwise display "*Repeat scan*". The read code is also printed on the serial port of the control unit (see section Serial Print).

5) Ins. Barcode Seq: When ON on "Barc. Mode → ON Seq.", you have to scan the barcode to enable the Sequence.
IMPORTANT: Barcode can be ONLY numeric.

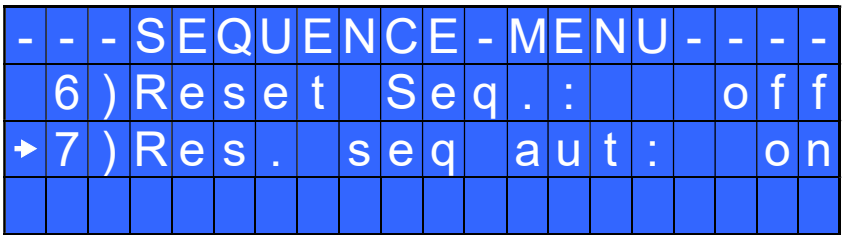

6) Reset seq.: When ON, you can reset the Sequence (pushing the Reset button).

7) Aut. res seq- Automatic Reset Sequence: When ON, the control unit automatically resets after the end of the sequence. When OFF it is necessary to press OK at the end of each sequence.

OPTION MENU:

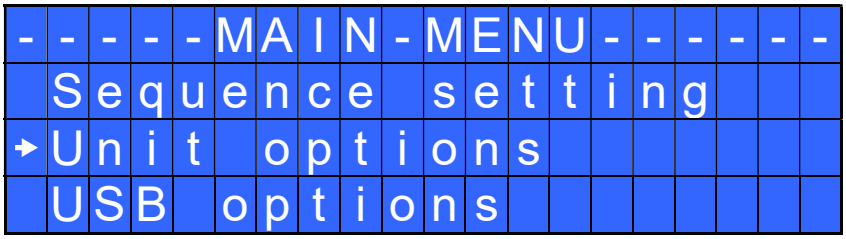

Unit Options:

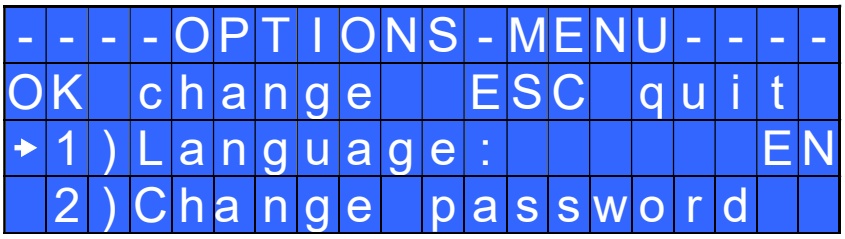

1) Language: This option allows to choose among the languages available: English, French, German, Italian, Spanish and Portuguese.

2) Change password: You can change password (see point 3).

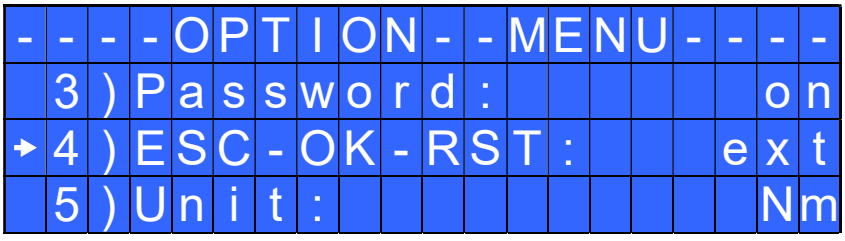

3) Password ON: When YES, you will be asked for the password to enter the menu. Otherwise select NO.

ATTENTION: Password is only asked to enter the menu the first time after switching the unit on.
The default password is: 0000.

4) ESC-OK-RST: Press ESC in case of error. Press OK at the end of a program or to reset a sequence or a program (see point 7: Reset).
When INT, the operator must press the required key on the front panel.
When EXT, functions can only be enabled through proper connections on the back panel (see paragraph I/O connections).
When INT+EXT you can press either the button on the front or on the back panel.

5) Unit: You can choose between the following units of measurements: Nm, lbf.in and kgf.cm.

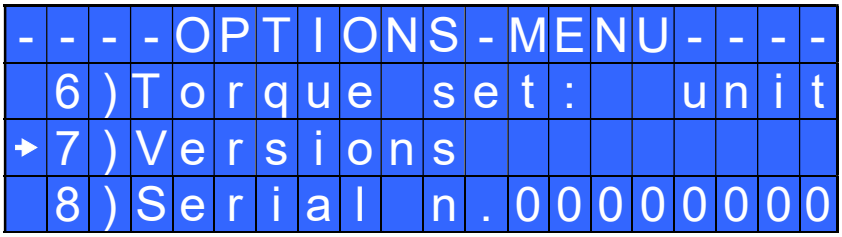

6) Torque mode: this parameter allows to set the % or # (numerical value) operating mode of the control unit. Each time this parameter is changed, the unit of measurement is set automatically in Nm and any compensation value is reset. If you change from % to #, an intermediate speed and torque value will be set for each program, while in reverse the maximum values are set. If you move from # to %, the torque values set for each program will be converted into a percentage.

7) Model Detect: this function allows you to enable or disable automatic screwdriver recognition. If set to Auto, the unit recognizes and sets the screwdriver autonomously. In case of the screwdriver is not connected, the unit shows the warning "*Connect screwdriver*". When you connect a screwdriver different from the previous one or after formatting the unit (or on first use), the warning "*Change model*?" and the user can select "*No*" or "*Yes*". At the same time, the scrolling notice "*All program settings will be reset*" will be displayed to underline the fact that if "*Yes*" is selected, the torque, speed, etc. settings will be displayed. related to the previously connected screwdriver model will be lost. In the latter case, the new connected screwdriver will be set and the relative default values for torque and speed will be loaded. If the user selects "*No*" and leaves the screwdriver connected, the warning "*Connect right model*" which is the one set in the "*Model*" function of the relevant program, tightening is not allowed. In this mode it is not possible to manually set a screwdriver model. If there is no screwdriver connected to the unit, the display shows ---- instead of the model and torque. In case of an unrecognizable screwdriver is connected, the unit will not show any model and tightening will not be allowed.
If this function is set in **manual**, automatic model recognition is disabled and the user will select the desired screwdriver model through the Program menu). After formatting the unit or its first use with the Model Detection setting in Manual, the warning "*Select Model*" will appear on the display.

In both operating modes (Auto and Manual), if in field 3) of the Program menu you are in the "*Model*: ----" status, it is not possible to change the values relating to the torque and speed in tightening (unscrewing).

ATTENTION: with the model detection set to Auto in case of recognition malfunctions caused for example by external interferences, set the model detection in Manual and select the desired screwdriver.

8) Versions: in this screen you can see the versions of boards mounted inside the unit.

9) Serial number: it is the indication number of the control unit. Default number: 0000000.
It could be the real serial number of the unit or another one you could choose (7 digits max).
This number will also be the name of the folder in the USB drive where you will save the report of your data (see EDU EXPAND part).

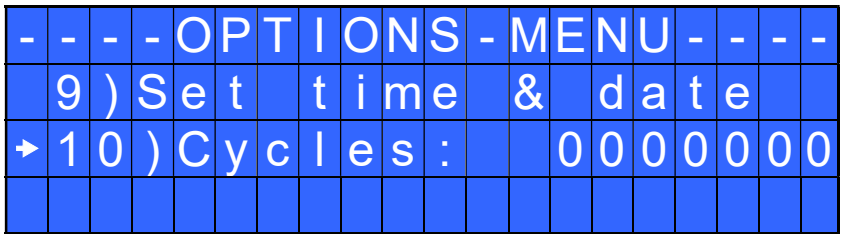

10) Set time & date: to set time and date on the control unit.

11) Cycles - Total number of cycles: It shows the number of tightened and loosened screws. This number can't be modified.

USB Options:

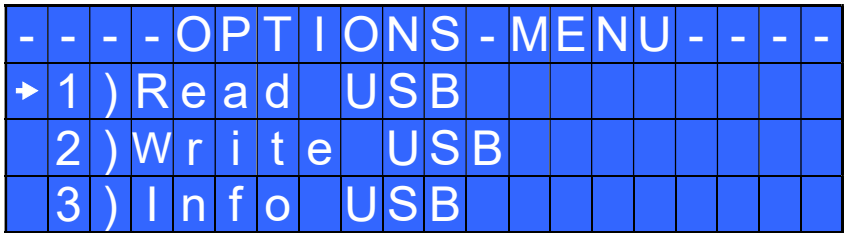

1) **Read USB**: press OK and read the USB drive and select the file SETxx.KOL you desire.
The EDU control unit recognizes only files as SETxx.KOL (see EDU EXPAND part).

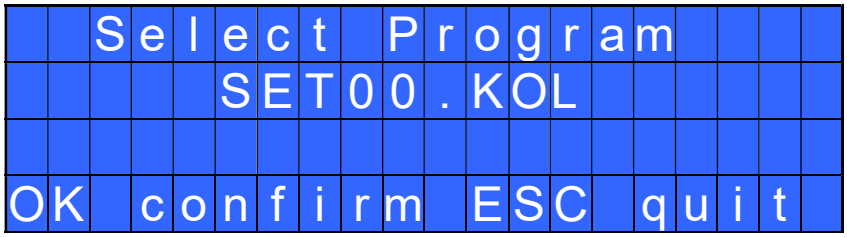

2) **Write USB:** press OK and create your new SETxx.KOL application where you save all the parameters you have set in the control unit.

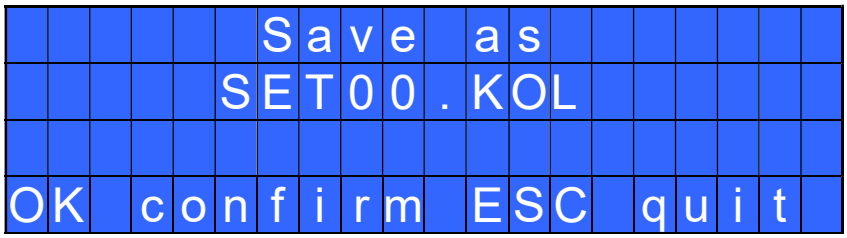

3) **Info USB:** press OK and see the loaded program.
You can see the loaded program only if you have saved the program in your USB drive as named as SETxx.KOL.

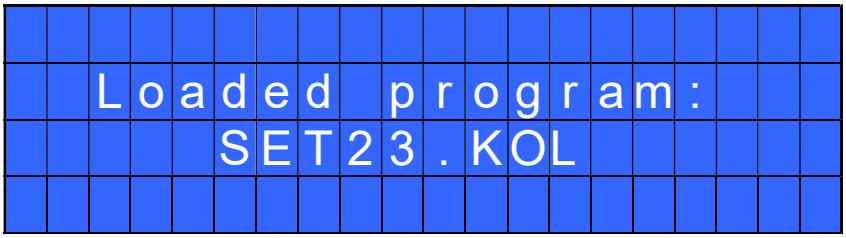

TORQUE CALIBRATION (only % mode)

The torque calibration function allows to view the torque value in Nm or in.lbs or kgf.cm directly on the display of the control unit.

IMPORTANT: You need a torque tester to proceed, either with static transducer (model minik or K) or with rotary transducer (model minik-e).

CALIBRATION PROCESS:
1. Select *Show Torque* at point 24 of the menu and press OK.
2. The following screen will appear on the display:

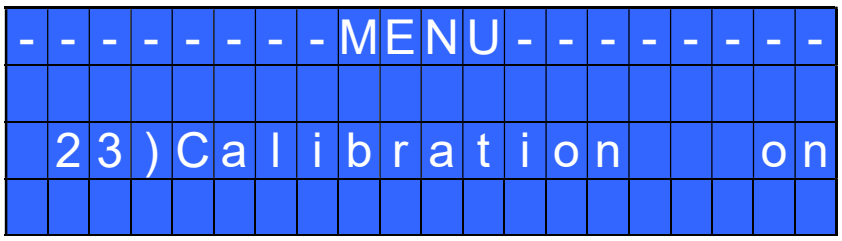

3. Press OK to confirm. If you choose OFF, calibration will be interrupted and no torque value will be displayed. You choose ON, calibration will continue and the following screen will be displayed:

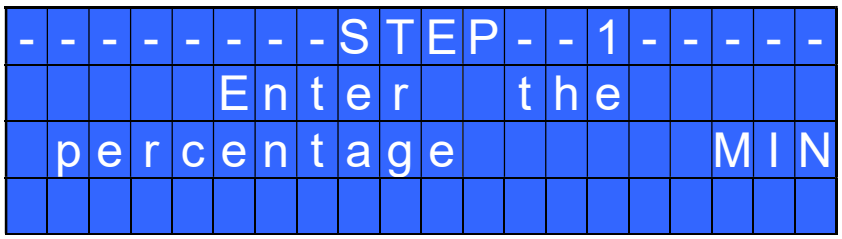

4. Set the first torque level at 20% percentage by pressing ⇧.
(20% is just an example).

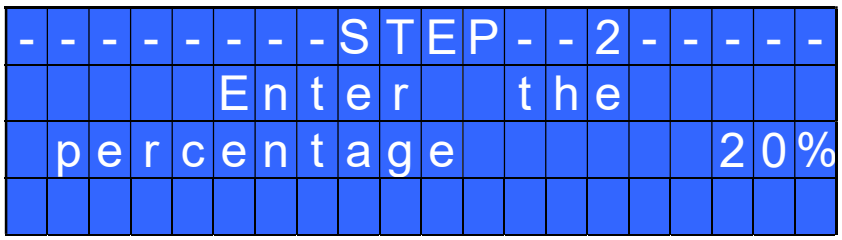

5. Press OK. You will see:

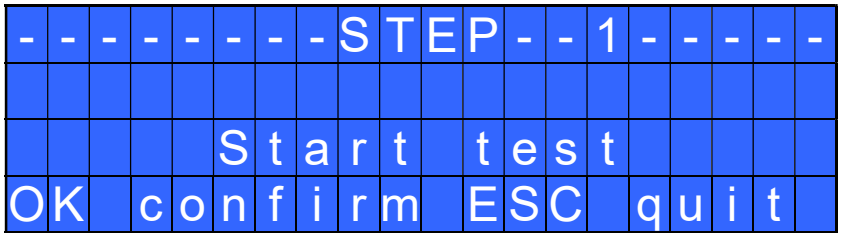

Complete a screwing cycle on the mini k5 and take note of torque value.

In case of error, you will see:

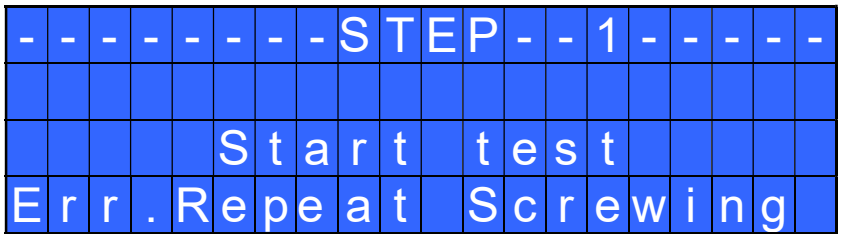

Just repeat the test.

6. Press ESC to abort the calibration process.
Press OK, then the display will show:

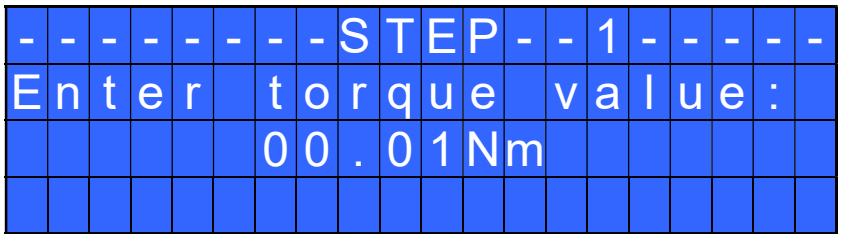

Set the torque value by selecting each digit individually pressing ⇧ and ⇩ and press OK to confirm it, then press OK again to save. You will see:

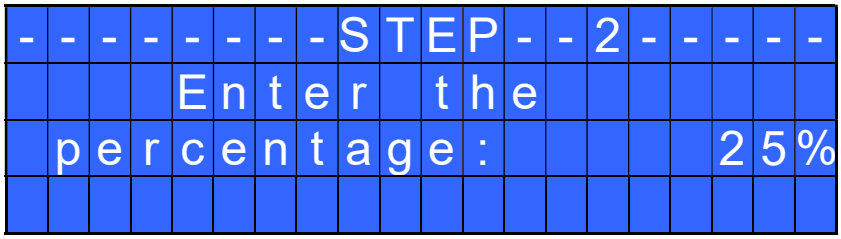

7. Set the percentage of the second torque to 25% by pressing ⇧ and press OK.
(25% is just an example).

8. Repeat the procedures described on points 4 and 5.
9. When calibration ends, “Setting end” will be displayed. You will hear two beep sounds, too.
Now you are ready to work and see the correct torque on the display.

WARNING:

- Calibration values will be referred to the parameters of the control unit which are set during calibration, i.e. if you modify speed or torque, the unit will need to be recalibrated. During calibration when a screwing is not carried out correctly or if for any reasons you’re not sure of the torque value it is possible to repeat it. A wrong screwing can affect the precision of the calibration.
- Calibration is carried out for two torque levels optionally chosen. The minimum calibration interval is 5% (example: if I have to work at 50%, I can calibrate at 45% and 55%). In this case, if for any reasons I need to work at torque percentages which are lower or higher than the min-max ones set during the calibration, they will be analyzed and displayed anyway but since they won’t be based on effective data the torque value displayed may be not accurate.
- During calibration it is not possible to go back to the previous screen. Press ESC to stop calibration and then repeat the screwing cycles.

USE OF T&A (Torque & Angle)

Choose the T & A mode (see point 29: Modify function on the program menu)
It is possible to set 6 different modes:

- TORQUE (Torque): It's the most common use mode. The control unit shows the tightening torque and the torque starting from a certain torque percentage (threshold torque, see point 30). If the final torque and angle values are within the preset minimum and maximum values, the screw is correctly tightened. If the torque and/or angle are outside the preset values, the screw will be considered as incorrectly tightened. In this case the red led will light up and the message "*Error Max (Min) Angle*" or "*Error Max (Min) Torque*" will be displayed.

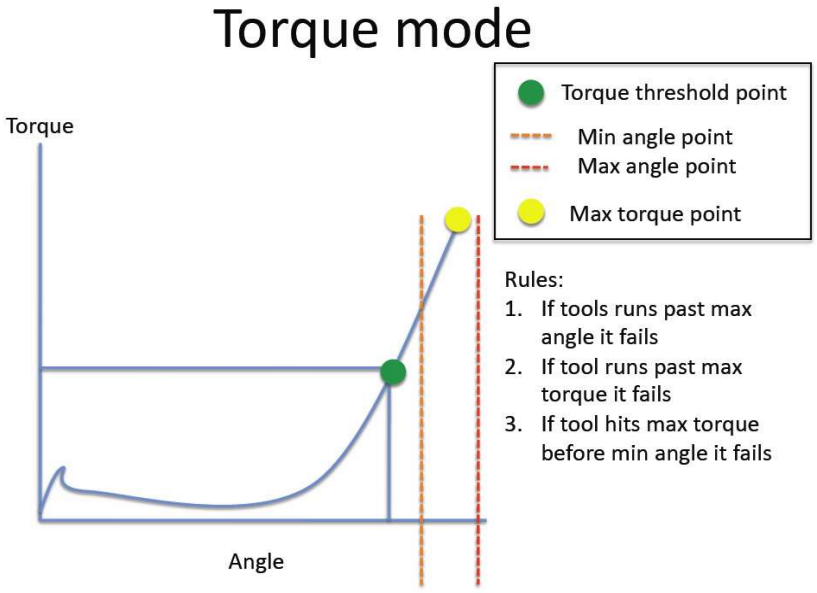

- TORQUE/INPUT (T/IN): It corresponds to *Torque* mode, except for the threshold torque which can't be set by the operator: in fact the value is the result of an external impulse through a proper contact (see paragraph "connections"). It can be very useful if the operator wants the control unit to start counting the angle from a position which is indicated by a precision instrument.

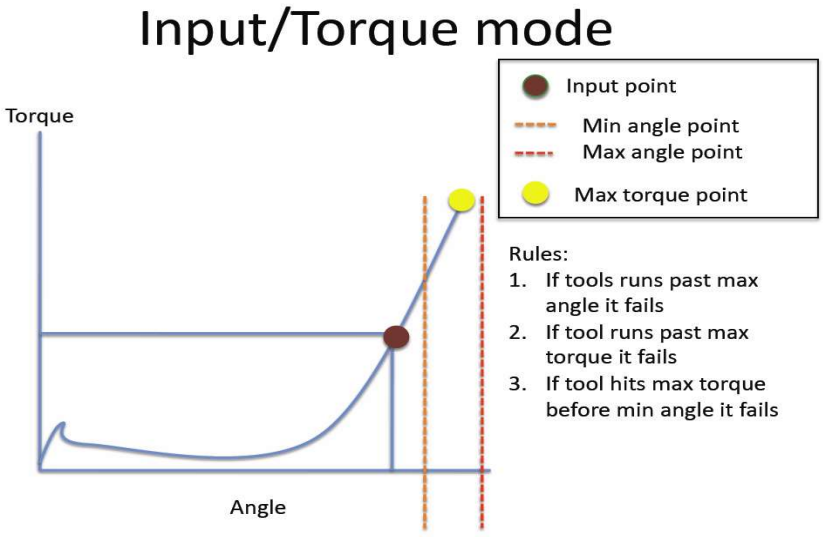

- TORQUE/LEVER (T/LV): No threshold is preset by the operator: the angle value that appears on the display corresponds to the angle that is carried out starting from the moment in which the lever is pressed until the torque is reached.

- ANGLE (Ang.): This mode gives priority to the angle to be reached. The value is measured starting from a tightening torque percentage.
  Starting from the preset threshold torque (see point 30) the system will start counting the degrees and when the preset angle is reached the screwdriver will stop. If the preset angle is reached the screw will be considered as correctly tightened, the green led will light up and the message "*tightening OK*" will be displayed on the status bar. If the screwdriver stops before reaching the preset angle the tightening will be considered not ok, the red led will light up and the message "error angle not reached" will be displayed on the status bar. Therefore it's very important to set a torque value (line 5) which is sufficiently higher than the threshold value (line 30), so that the set value is reached before the screwdriver stops because of the reached torque.

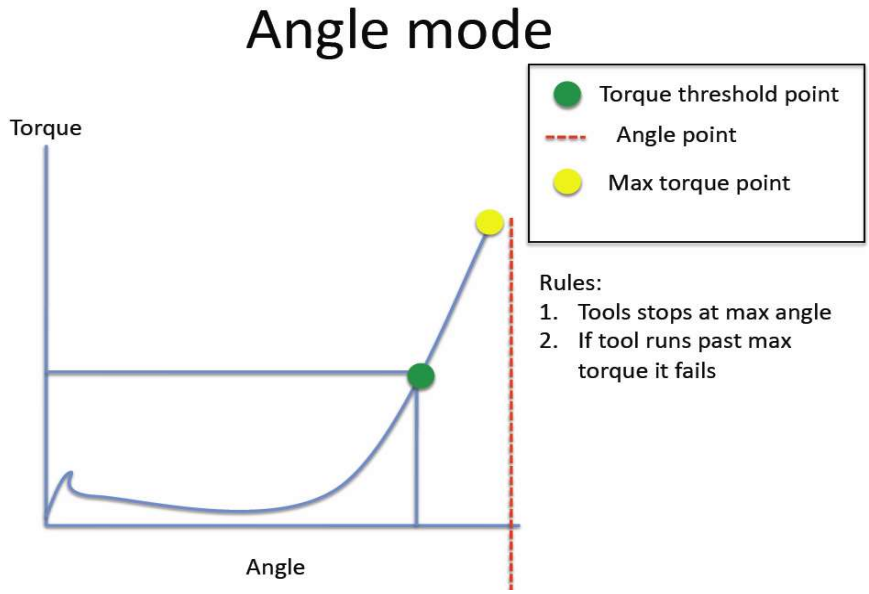

- ANGLE/INPUT (A/IN): The threshold can't be set by the operator: in fact the value is the result of an external impulse through a proper contact (see paragraph "connections").
  This function can be very useful if the operator wants the screw to rotate a certain number of degrees after reaching a position indicated by a precision instrument.

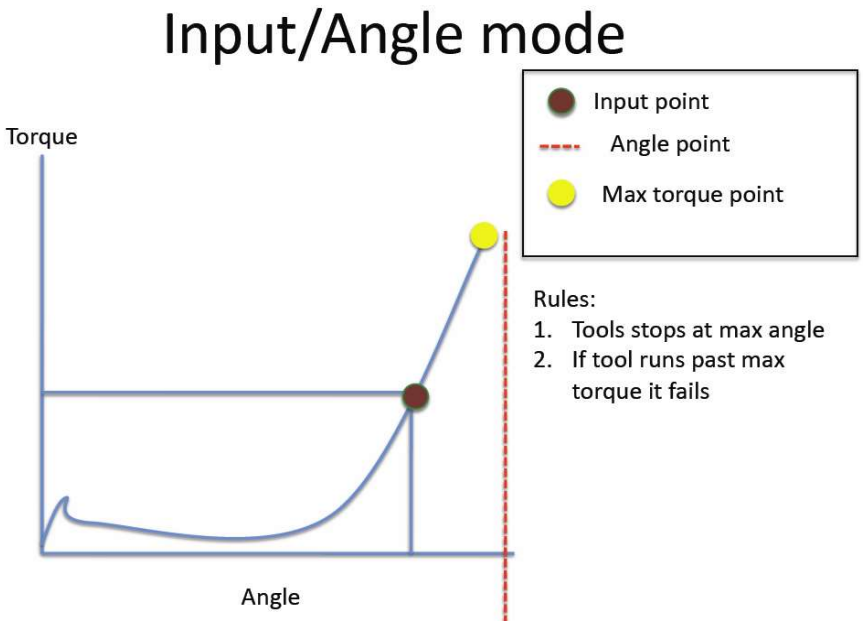

- ANGLE/LEVER (A/LV): the threshold torque value can't be set by the operator and the angle value that appears on the display corresponds to the angle that is carried out starting from the moment in which the lever is pressed. The angle has to be set in the "Ang. max ". If the lever is released before reaching the set angle, the error "Error ang not OK" will be displayed.

TORQUE - SPEED TABLES

The following tables valid for the Unit operating mode show the selectable torques for each speed.

MITO 15

Nm		Lbf.in		Kgf.cm		
min	MAX	min	MAX	min	MAX	rpm
0,4	0,8	3,6	7,1	4,1	8,2	450
0,5	0,9	4,5	8,0	5,1	9,2	500
0,5	1,0	4,5	8,9	5,1	10,2	550
0,6	1,1	5,4	9,7	6,2	11,2	600
0,7	1,2	6,2	10,6	7,2	12,2	650
0,7	1,3	6,2	11,5	7,2	13,3	700
0,8	1,4	7,1	12,4	8,2	14,3	800
0,9	1,5	8,0	13,3	9,2	15,3	850

PLUTO 3

Nm		Lbf.in		Kgf.cm		
min	MAX	min	MAX	min	MAX	rpm
0,5	0,8	4,5	7,1	5,1	8,2	370
0,6	1,1	5,4	9,7	6,2	11,2	500
0,7	1,4	6,2	12,4	7,2	14,3	640
0,8	1,6	7,1	14,2	8,2	16,3	770
0,9	1,8	8,0	15,9	9,2	18,4	900
1,0	2,0	8,9	17,7	10,2	20,4	1040
1,0	2,2	8,9	19,5	10,2	22,4	1170
1,1	2,3	9,8	20,4	11,2	23,5	1300

PLUTO 6

Nm		Lbf.in		Kgf.cm		
min	MAX	min	MAX	min	MAX	rpm
0,9	2,1	8,0	18,6	9,2	21,4	200
1,1	3,1	9,8	27,4	11,3	31,6	300
1,2	3,9	10,7	34,5	12,3	39,8	400
1,2	4,6	10,7	40,7	12,3	46,9	500
1,3	4,9	11,6	43,4	13,3	50,0	600
1,3	5,5	11,6	48,7	13,3	56,1	700
1,4	6,0	12,4	53,1	14,3	61,2	800
1,5	6,3	13,3	55,8	15,3	64,2	850

PLUTO 10

Nm		Lbf.in		Kgf.cm		
min	MAX	min	MAX	min	MAX	rpm
0,7	1,7	6,2	15,0	7,2	17,3	110
1,0	3,7	8,9	32,7	10,2	37,7	200
1,0	4,6	8,9	40,7	10,2	46,9	250
1,1	5,2	9,8	46,0	11,3	53,0	300
1,2	6,4	10,7	56,6	12,3	65,3	400
1,3	7,3	11,6	64,6	13,3	74,4	450
1,5	7,9	13,3	69,9	15,3	80,6	500
1,5	9,1	13,3	80,5	15,3	92,8	600

PLUTO 15

Nm		Lbf.in		Kgf.cm		
min	MAX	min	MAX	min	MAX	rpm
1,3	2,5	11,6	22,1	13,3	25,5	60
1,5	4,5	13,3	39,8	15,3	45,9	80
2,0	6,1	17,8	54,0	20,4	62,2	100
2,1	7,7	18,6	68,2	21,5	78,5	130
2,2	9,8	19,5	86,7	22,5	99,9	170
2,3	11,4	20,4	100,9	23,5	116,2	210
2,4	12,7	21,3	112,4	24,5	129,5	250
2,7	14,7	23,9	130,1	27,6	149,9	320

PLUTO 20

Nm		Lbf.in		Kgf.cm		
min	MAX	min	MAX	min	MAX	rpm
2,9	6,3	25,7	55,8	29,6	64,2	50
3,8	8,6	33,7	76,1	38,8	87,7	60
3,9	9,9	34,6	87,6	39,8	101,0	70
4,0	13,9	35,5	123,0	40,8	141,7	100
4,0	15,7	35,5	139,0	40,8	160,1	120
4,1	18,6	36,3	164,6	41,9	189,7	150
4,4	20,0	39,0	177,0	44,9	203,9	170
4,5	22,9	39,8	202,7	45,9	233,5	200

PLUTO 35

Nm		Lbf.in		Kgf.cm		
min	MAX	min	MAX	min	MAX	rpm
2,5	9,0	22,2	79,7	25,5	91,8	40
4,4	13,3	39,0	117,7	44,9	135,6	50
4,9	16,6	43,4	146,9	50,0	169,3	60
5,3	19,0	47,0	168,2	54,1	193,7	70
5,7	21,9	50,5	193,8	58,2	223,3	80
6,3	25,0	55,8	221,3	64,3	254,9	100
6,7	28,9	59,3	255,8	68,4	294,7	120
6,9	30,6	61,1	270,8	70,4	312,0	140

PLUTO 50

Nm		Lbf.in		Kgf.cm		
min	MAX	min	MAX	min	MAX	rpm
4,2	14,0	37,2	123,9	42,9	142,8	20
7,4	25,1	65,5	222,2	75,5	255,9	30
8,4	33,6	74,4	297,4	85,7	342,6	40
8,9	39,3	78,8	347,8	90,8	400,7	50
9,4	43,2	83,2	382,4	95,9	440,5	60
9,5	45,6	84,1	403,6	96,9	465,0	70
9,6	49,1	85,0	434,6	97,9	500,7	80
10,4	52,3	92,1	462,9	106,1	533,3	90

PLUTO 3 ANG

Nm		Lbf.in		Kgf.cm		
min	MAX	min	MAX	min	MAX	rpm
0,4	0,6	3,6	5,3	4,1	6,1	370
0,5	1,0	4,5	8,9	5,1	10,2	500
0,6	1,3	5,4	11,5	6,2	13,3	640
0,7	1,5	6,2	13,3	7,2	15,3	770
0,7	1,7	6,2	15,0	7,2	17,3	900
0,8	1,9	7,1	16,8	8,2	19,4	1040
0,9	2,0	8,0	17,7	9,2	20,4	1170
1,0	2,1	8,9	18,6	10,2	21,4	1300

PLUTO 6 ANG

Nm		Lbf.in		Kgf.cm		
min	MAX	min	MAX	min	MAX	rpm
0,9	2,0	8,0	17,7	9,2	20,4	200
1,0	3,1	8,9	27,4	10,2	31,6	300
1,1	4,0	9,8	35,4	11,3	40,8	400
1,2	4,6	10,7	40,7	12,3	46,9	500
1,3	5,1	11,6	45,1	13,3	52,0	600
1,4	5,5	12,4	48,7	14,3	56,1	700
1,5	5,9	13,3	52,2	15,3	60,2	800
1,7	6,1	15,1	54,0	17,4	62,2	850

PLUTO 8 ANG

Nm		Lbf.in		Kgf.cm		
min	MAX	min	MAX	min	MAX	rpm
1,0	1,7	8,9	15,0	10,2	17,3	110
1,2	3,5	10,7	31,0	12,3	35,7	200
1,3	4,3	11,6	38,1	13,3	43,8	250
1,4	5,2	12,4	46,0	14,3	53,0	300
1,6	6,0	14,2	53,1	16,4	61,2	400
1,6	6,5	14,2	57,5	16,4	66,3	450
1,7	7,0	15,1	62,0	17,4	71,4	500
1,9	7,6	16,9	67,3	19,4	77,5	600

INTERPRETATION OF ACOUSTIC SIGNALS

The control unit emits sounds which help you understand if the screwing has been carried out correctly or not. When the torque is reached meeting all the parameters set, the control unit utters a 0.5 sec beep as confirmation. In case of Program End, the unit will utter other two beeps. On the other hand, torque reached under min time, during the Ramp time or under the Fast Speed (see error signals on the display) will cause the control unit to utter three beep sounds.

I/O CONNECTIONS:

EDU 2AE/TOP control unit series have connectors placed on the back panel. These connectors allow to enable functions through inputs and to take signals through outputs. The inputs are activated by connecting them to ground. A positive voltage must NEVER be brought to these inputs. Bringing 24V to the unit inputs could damage the inputs themselves. As seen from the picture below, to enable the inputs it is recommended to bring a clean contact by using a relay or a simple switch or button.

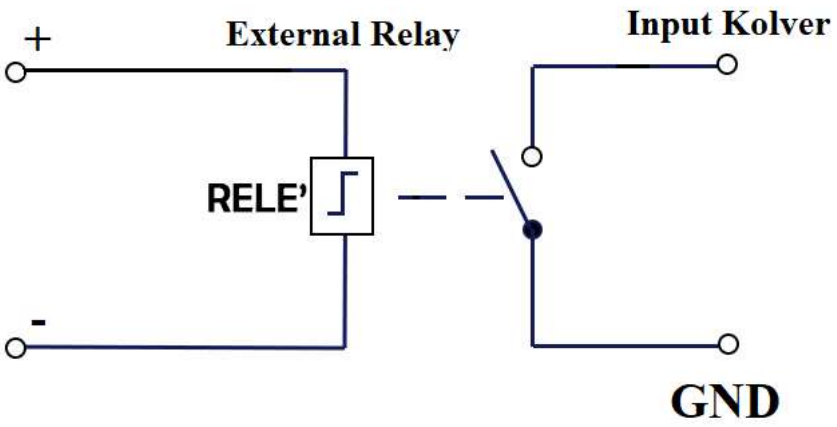

As for the outputs, they are all PNP type with active function. On each pin you will have 24V DC.

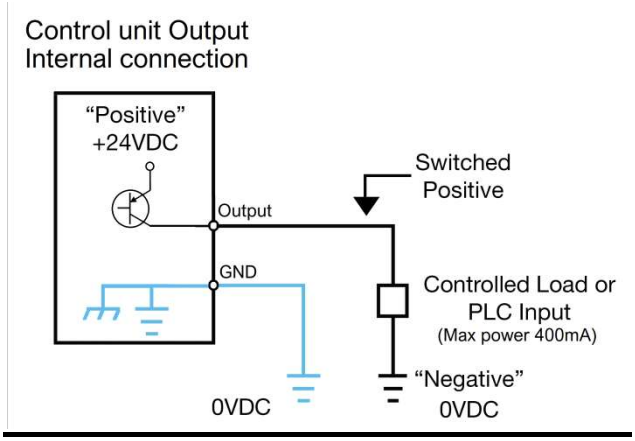

These pins can be used directly connected to PNP inputs (PLC) or used to turn on LEDs, buzzers or other devices with 24V power supply. The maximum total power of the outputs is about 400mA. Using inductive loads such as relays or other loads with an initial consumption peak greater than 400mA will send all outputs to protection, displaying the message "output disable". To restore the outputs after a protection, turn off and turn on the unit again.

1
CN1
10
Enable
Output
1
CN2
14
O
I
1
CN3
11
1
CN4
9
USB
Print
CN5
CN6
CN7

- CN1 CONNECTOR – 10 pins

It is situated on the upper part of the back panel.

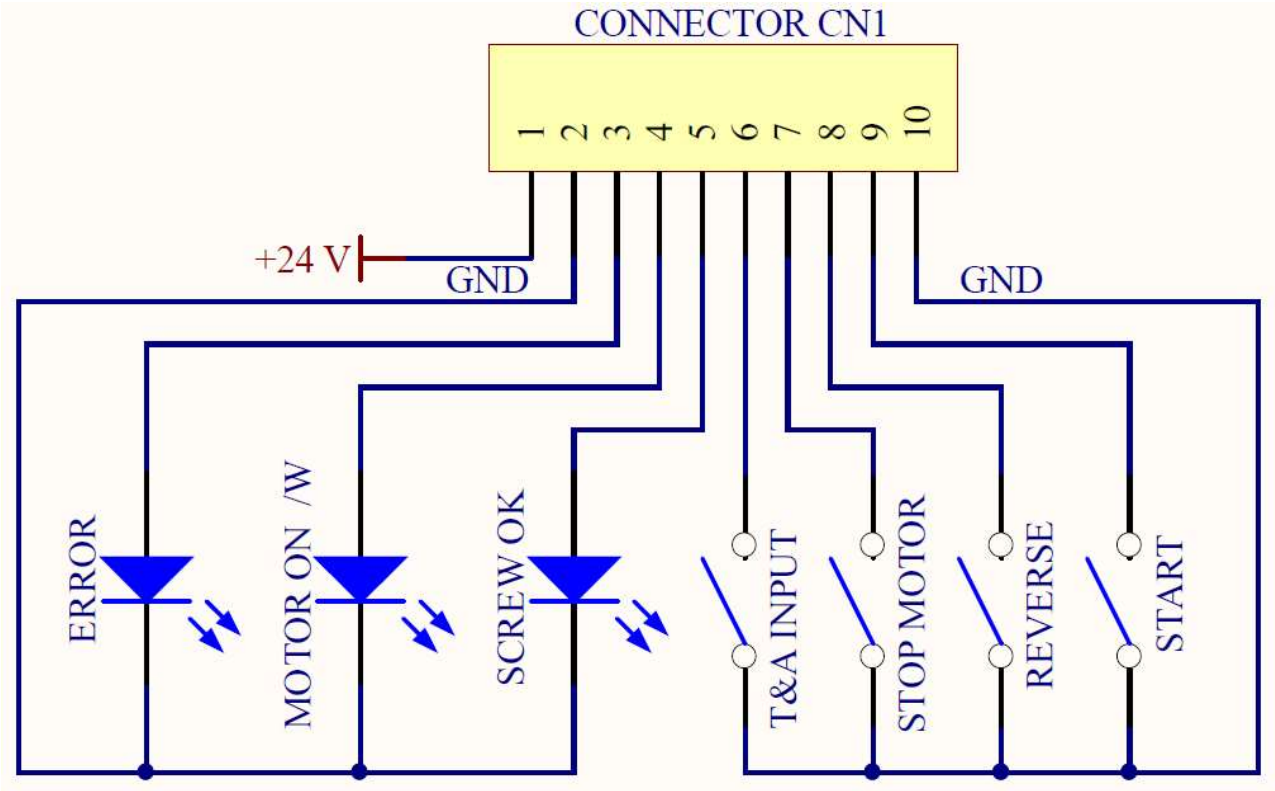

PIN	NAME	FUNCTION
		OUTPUT
1	+24V	+24V voltage protected. The maximum current consumption is 400mA. CAN NOT BE USED TO POWER EXTERNAL DEVICES.
2	GND	Common pin. Signals must be taken between this pin (GND and the respective signal pins (pin 3, 4 and 5).
3	ERROR	Error signal: it activates every time an error occurs. The red led on the front panel will switch on. Signal is 24V.
4	MOTOR ON (\W)	It activates when the motor turns during screwing. Signal is 24V.
5	SCREW OK	Correct screw signal. The green led on the front panel will switch on. Signal is 24V.
		INPUT
6	T&A INPUT	External input for making the control unit start to count the angle. It can be only used in A/IN and T/IN mode (see T&A paragraph)
7	STOP MOTOR	Remote motor stop. If it's activated the message "STOP MOTOR ON" appears on the display. The motor will stop and won't start working again as long as the contact is closed (as Input pin 1 of CN2).
8	REVERSE	Remote motor start with torque control while unscrewing.
9	START	Remote start with torque control while screwing.
10	GND	Common pin. The desired function is activated through a contact between this pin and one of the other pins.

- CN2 CONNECTOR – 14 pins

All of the following pins are input: make a contact with pin 14 to activate them.

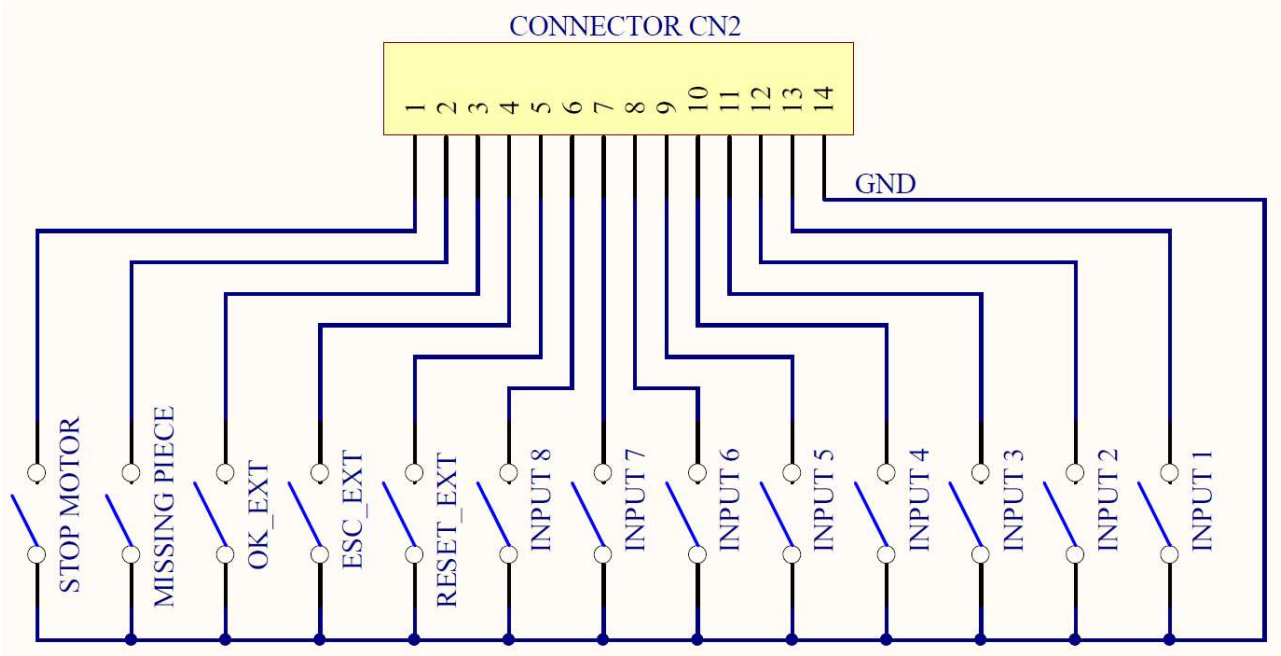

PIN	NAME	FUNCTION
1	STOP MOTOR	Remote motor stop. If it's activated the message "STOP MOTOR ON" appears on the display. The motor will stop and won't start working again as long as the contact is closed (as Input pin 1 of CN2).
2	MISSING PIECE	If enabled it stops the motor, enables the error signal and "*Error missing piece*" is displayed on the status bar.
3	OK EXT	If enabled (see point 4: OK-ESC commands, in the option menu), remote OK key function.
4	ESC EXT	If enabled (see point 4: OK-ESC, in the option menu), ESC key function to reser remote errors.
5	RESET EXT	If enabled (see point 4: OK-ESC commands, in the option menu), it resets program or sequence according to the preset function (see point 5: Reset, in the option menu)
6	INPUT 8	Switch – selection of program 8
7	INPUT 7	Switch – selection of program 7
8	INPUT 6	Switch – selection of program 6
9	INPUT 5	Switch – selection of program 5
10	INPUT 4	Switch – selection of program 4
11	INPUT 3	Switch – selection of program 3
12	INPUT 2	Switch – selection of program 2
13	INPUT 1	Switch – selection of program 1
14	GND	Common to every input. Signals have to be enabled making contact between the desired signal and this pin (GND) .

- CN3 CONNECTOR – 11 pins

All of the following pins are output.

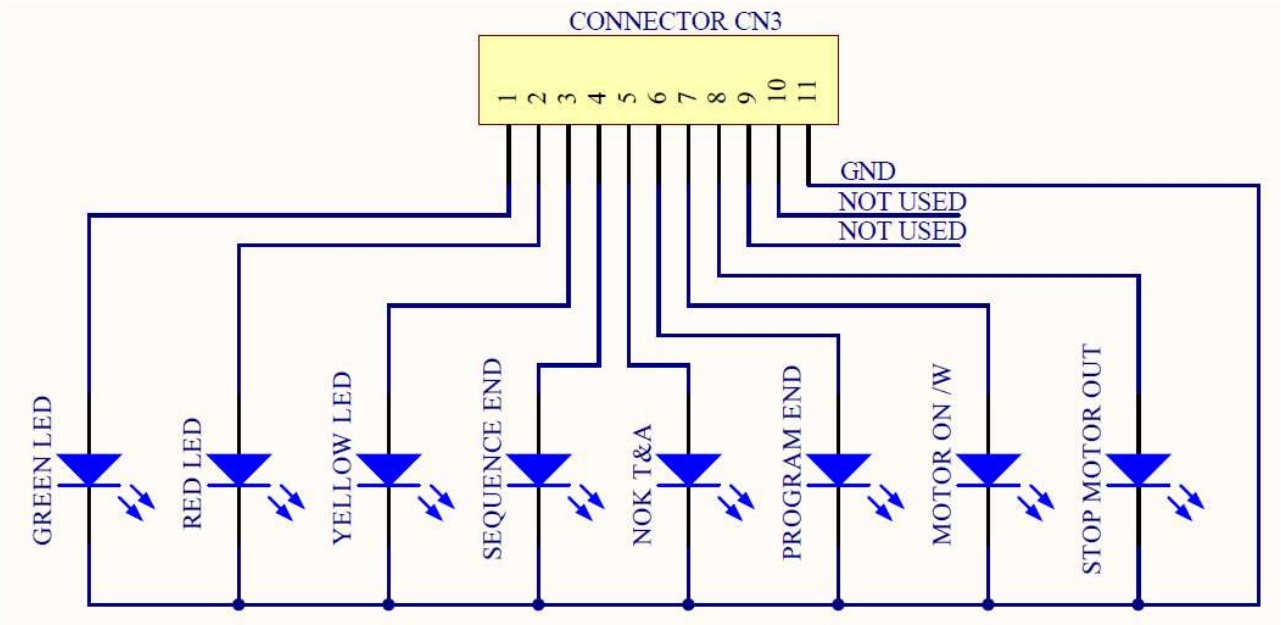

PIN	NAME	FUNCTION
1	GREEN LED	This signal works in parallel with the green led on the front panel.
2	RED LED	This signal works in parallel with the red led on the front panel.
3	YELLOW LED	This signal works in parallel with the yellow led on the front panel.
4	SEQUENCE END	It indicates the end of a sequence, if enabled.
5	NOK T&A	It activates if any angle error occurs.
6	PR OK	It activates at the end of each program.
7	MOTOR ON (\W)	It activates when the motor runs while tightening.
8	STOP MOTOR	It activates when stop motor is enabled.
9	NOT USED	
10	NOT USED	
11	GND	Common to every output. Signals have to be enabled making contact between the desired signal and this pin (GND).

- CN4 CONNECTOR – 9 pins

All of the following pins are output.

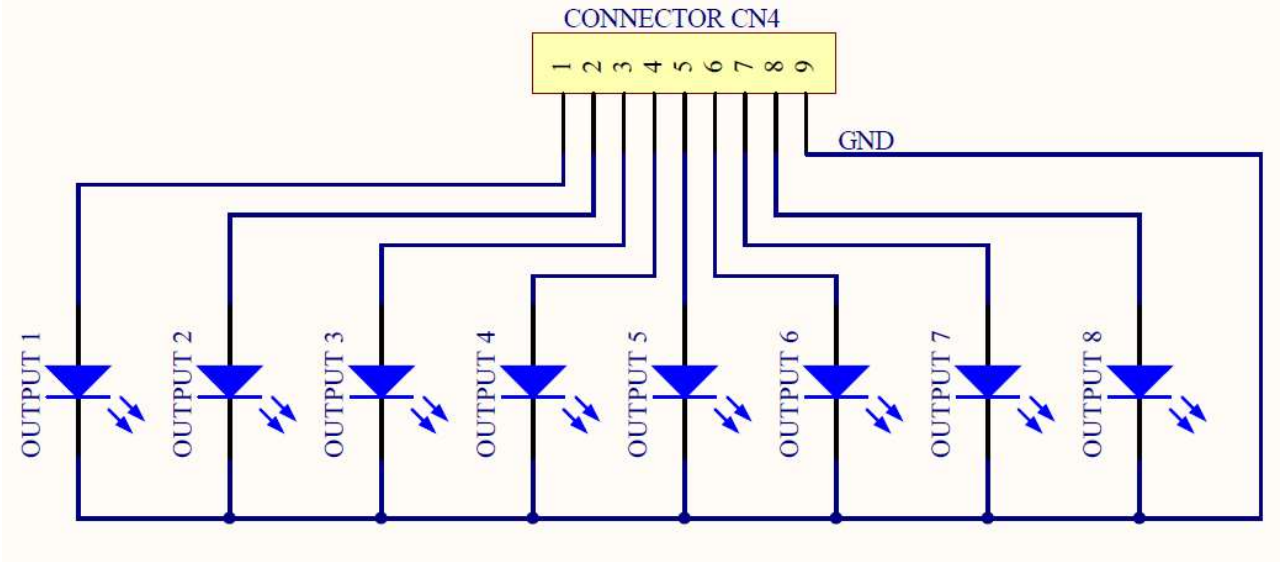

PIN	NAME	FUNCTION
1	OUTPUT 1	It indicates you're using program 1
2	OUTPUT 2	It indicates you're using program 2
3	OUTPUT 3	It indicates you're using program 3
4	OUTPUT 4	It indicates you're using program 4
5	OUTPUT 5	It indicates you're using program 5
6	OUTPUT 6	It indicates you're using program 6
7	OUTPUT 7	It indicates you're using program 7
8	OUTPUT 8	It indicates you're using program 8
9	GND	Common to every output. Signals have to be enabled making contact between the desired signal and this pin (GND).

- CN5 CONNECTOR (25 pin connector - female):

PIN	NAME	FUNCTION
1	GND	Common to every input. Signals have to be enabled making contact between the desired signal and this pin (common 0VDC).
2		Not used
3	STOP MOTOR OUT	It indicates stop motor is enabled
4	OUTPUT 8	It indicates you're using program 8
5	OUTPUT 7	It indicates you're using program 7
6	OUTPUT 6	It indicates you're using program 6
7	OUTPUT 5	It indicates you're using program 5
8	OUTPUT 4	It indicates you're using program 4
9	OUTPUT 3	It indicates you're using program 3
10	OUTPUT 2	It indicates you're using program 2
11	OUTPUT 1	It indicates you're using program 1
12	+24V	+24V available on this pin, they can't be used to charge external devices.
13	+5V	+5V available on this pin, it can't be used to charge external devices
14	OK EXT	If enabled (see point 4: OK-ESC, in the option menu), remote OK key function.
15	ESC EXT	If enabled (see point 4: OK-ESC, in the option menu), ESC key function to reset remote errors.
16	RESET EXT	If enabled (see point 4: OK-ESC, in the option menu), it resets program or sequence according to the preset function (see point 5: Reset, in the option menu).
17	INPUT 8	Switch – selection of program 8
18	INPUT 7	Switch – selection of program 7
19	INPUT 6	Switch – selection of program 6
20	INPUT 5	Switch – selection of program 5
21	INPUT 4	Switch – selection of program 4
22	INPUT 3	Switch – selection of program 3
23	INPUT 2	Switch – selection of program 2
24	INPUT 1	Switch – selection of program 1
25	+15V	+15V available on this pin, not used to charge external devices

- CN6 CONNECTOR (serial connector 9 pin - male) - FOR BARCODE CONNECTION

PIN	NAME	FUNCTION
1	+15V	+15V available on this pin, it can't be used to charge external devices.
2	RX	Serial reception.
5	GND	Common to every input. Signals have to be enabled making contact between the desired signal and this pin (GND)
9	+5V	Not used.

IMPORTANT: the barcode scanner to be used must have the following features: RS232 transmission with 9600baud, 8 data bits, 1stop bit, no parity, terminators CR-LF.

- CN7 CONNECTOR (9 pin serial connector - female) – PRINT FUNCTION

PIN	NAME	FUNCTION
1	+15V	Not used.
2	TX	Serial transmission.
3	RX	Serial reception.
5	GND	Common to every input. Signals have to be enabled making contact between the desired signal and this pin (GND).
9	+5V	Not used.

- **USB-PRINT CONNECTOR**

Only used to print data on PC (see dedicated paragraph).

ATTENTION: Output signals are protected from an appropriate circuit. Overload of the available signals (> 400 mA) or short circuit will result in the stop of the unit. To re-activate signals, it is necessary to switch off the unit for 5-6 seconds, check connections and output loads then switch the unit on.

CORRECT SCREWS MESSAGES ON DISPLAY

On the status bar it will display *"Screw OK"*.	A correct screwing has been performed, reaching the pre-set torque value.
On the status bar it will display "*Angle OK*".	A correct screwing has been performed, reaching the pre-set angle.
On the status bar it will display "*Runtime OK*".	A correct screwing has been performed, reaching the pre-set runtime.
On the status bar it will display "*Reverse torque OK"*	A correct screwing has been performed, reaching the pre-set reverse torque value.

TROUBLE SHOOTING

ERROR	PROBLEM	SOLUTION
0	"*waiting connection*" doesn't turn into "*loading*" after it's been switched on.	Contact the nearest Kolver dealer.
1	"*Error Torque Control*" is displayed on the status bar	Make a new screw. If the error persists, change the torque and speed settings.
2	"*Error Fast Speed*" is displayed on the status bar (the torque signal is displayed during the brake time).	
3	"*Reverse incomplete*" is displayed on the status bar (the displayed torque signal is correct but the set unscrewing is not complete).	
4	"*Pre-Reverse incompl.*" is displayed on the status bar (the lever has been released before the runtime has been achieved)	
5	"*Under min time*" is displayed on the status bar (the torque signal is displayed below the pre-set minimum time).	
6	"*Over maximum time*" is displayed on the status bar (torque is not reached and the screwing time is over the preset maximum time).	
7	"*Error PV torque*" is displayed on the status bar (the torque signal is displayed inside the set maximum time).	
8	"*Error min torque*" is displayed on the status bar (the torque signal is displayed below the preset minimum torque).	
9	"*Error max torque*" is displayed on the status bar (the torque signal is displayed over the set maximum torque).	
10	"*Error min angle*" is displayed on the status bar (the torque signal is displayed below the set minimum angle).	

11	"*Error max angle*" is displayed on the status bar (The max preset angle has been reached. Only available in Tor, T/lv and T/in mode).	
12	"*Error angle not OK"* is displayed on the status bar (The preset angle hasn't been reached. Only available in Ang., A/lv and A/in mode).	
13	"*Warning! No piece*" is displayed on the status bar (The "missing piece" contact is enabled).	-check contact 2 on the CN2 connector
14	"*Compensation error*" is displayed on the status bar. A negative torque value is displayed due to a high negative compensation value.	- increase or decrease the compensation value
15	In % mode, *"Model not available"* is displayed on the status bar (It has been made an to switch from % to Unit mode with a screwdriver model not available)	
16	In Unit mode, *"Torque / Speed Error"* is displayed on the status bar. (A torque or speed has been set which are not included in the table relating to the selected screwdriver)	- set a torque or speed value included in the range indicated in the table
17	"R*eleased lever error*" is displayed on the status bar (The lever has been released while tightening).	Such error can be enabled or disabled through "PROGRAM-MENU" (see point 18 on the program menu).
18	*"Reverse torque error"* is displayed on the status bar (The torque signal is displayed while loosening, but only if it's set on "max").	- The screwdriver couldn't loosen - Avoid motor stalling - Loosening too heavy
19	"*Output Disabled*". Protection of output signals was activated after exceeding maximum load (400mA).	- Check the set load is not over the allowed maximum value - Restart the control unit to reset error
20	"*Protection 12A*" is displayed on the status bar (it happens when current on mosfets of bridge H is > 12 A for at least 1 s)	- Decrease screwing time and check settings - Avoid motor stalling - Unscrewing too heavy - Joint too soft
21	"*Protection 14p5A*" is displayed on the status bar (it happens when current on mosfets of bridge H is > 14.5 A for at least 800 ms)	- Decrease screwing time and check settings - Avoid motor stalling - Unscrewing too heavy - Joint too soft
22	"*Protection 15A*" is displayed on the status bar (it happens when current on mosfets of bridge H is > 15 A for at least 500 ms)	- Decrease screwing time and check settings - Avoid motor stalling - Unscrewing too heavy

ATTENTION: IF THE OK/ESC OPTION IS DISABLED, ERRORS RESET AT THE FOLLOWING SCREW/PROGRAM. OTHERWISE PRESS ESC. IF THE PROBLEM PERSISTS, PLEASE CONTACT YOUR NEAREST KOLVER DEALER.

SERIAL PRINT:

Every control unit is supplied with a 9 pin serial female connector (connection pin: PIN 2 = TX, PIN 3 = RX, PIN 5 = GND) and a mini USB connector. You can print the results of each screwing on a printer (for example Kolver model PRNTR1) and/or on PC (for example through Hyper Terminal or Realterm or any data transmission program or EDU EXPAND only on EDU2AE/TOP ver. 3.00 – only print not setting). You can also save those results on a USB device (only on EDU2AE/TOP/E and EDU2AE/TOP/TA from ver. 3.00). The transmission characteristics (only serial and USB) are the following: 9600 (bits per second), 8 (data bits), n (no parity), 1 (bits stop 1).
The print string is the following:

BARCODE	*RESULT*	*PROGRAM NUMBER*	*MODEL*	*TORQUE%*	*SCREWING TIME*	*SPEED*

SCREW	*SEQUENCE STAGE*	*TORQUE*	*ANGLE*	*DATE HOUR*	*NOTICE*

BC: Barcode = it begins with "BC:" and it's followed by the code of the scanned product.

Result = screwing result: correct or incorrect.

OK = the torque has been correctly reached, all the selected parameters are satisfied and the control unit will give out a beep sound of 0.5 sec.

NOK = the torque has been reached during ramp time or Fast Speed (see error table). In this case, the unit will give out 2 beep sounds and the red led will light up.

PR: Program number = it indicates the running program.

Model = Model of screwdriver you're using.

T%: Torque% = percentage of the set torque level.

S: Speed = preset speed value.

ST: Screwing time = it indicates the time of the screwing.

Screw: Number of screws = number of tightened screws/total number of screws.

Seq: Sequence stage = it indicates the stage of the sequence.

T: Torque = torque value.

A: Angle = angle value.

Notice = in case of program end, it prints "Program End", in case of sequence end, it prints "Seq. end" or it indicates the type of error (see paragraph: trouble shooting).

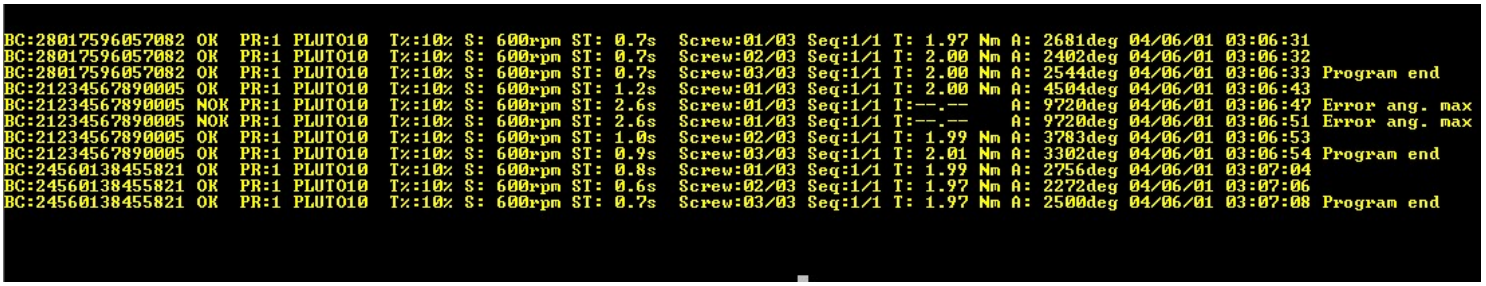

EDU EXPAND

EDU EXPAND is the software for pc created by Kolver to set, change and save all parameters of EDU2AE/TOP/E or EDU2AE/TOP/TA 3.0 unit.

It communicates with the control unit via miniUSB or RS232 and makes you create up to 100 different settings configurations, save them on your USB drive and then recall on your EDU unit.

Just connect your USB drive to the port on the front panel of the EDU unit and recall the desired program on the menu (see Menu Options, USB Options).

At the same time the programs set on control unit can be downloaded on USB and recalled on another unit and on EDU EXPAND, too.

Here is a quick guide to use EDU EXPAND.

Double click the icon program and this is the main view.

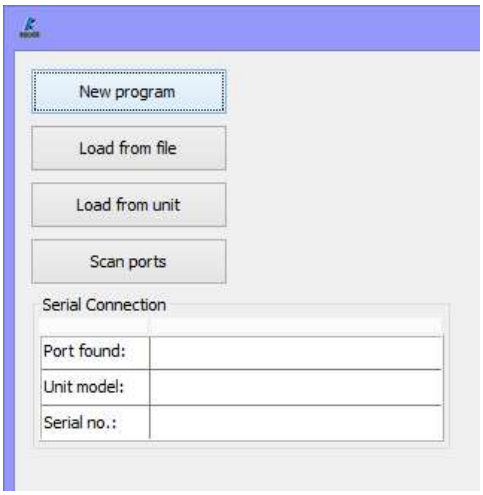

- **New program:** to load a new program.
- **Load from file**: it loads all programs, sequences and option settings from a previously saved file on your computer.
- **Load from unit**: it loads all program, sequence and option settings from the unit. The unit must first be connected to the pc using *Scan ports*.
- **Scan port**: it locates the unit. EDU EXPAND recalls the port, the model of the control unit and its serial number.
-

The control unit must be connected to the PC via miniUSB port or RS232 seat in the back panel of the unit.
If you cannot locate the control unit, make sure the unit and PC are connected properly or that the unit is on the initial screen of the Menu.

Here is the main screen when a program has been recalled or when you are creating a new one.

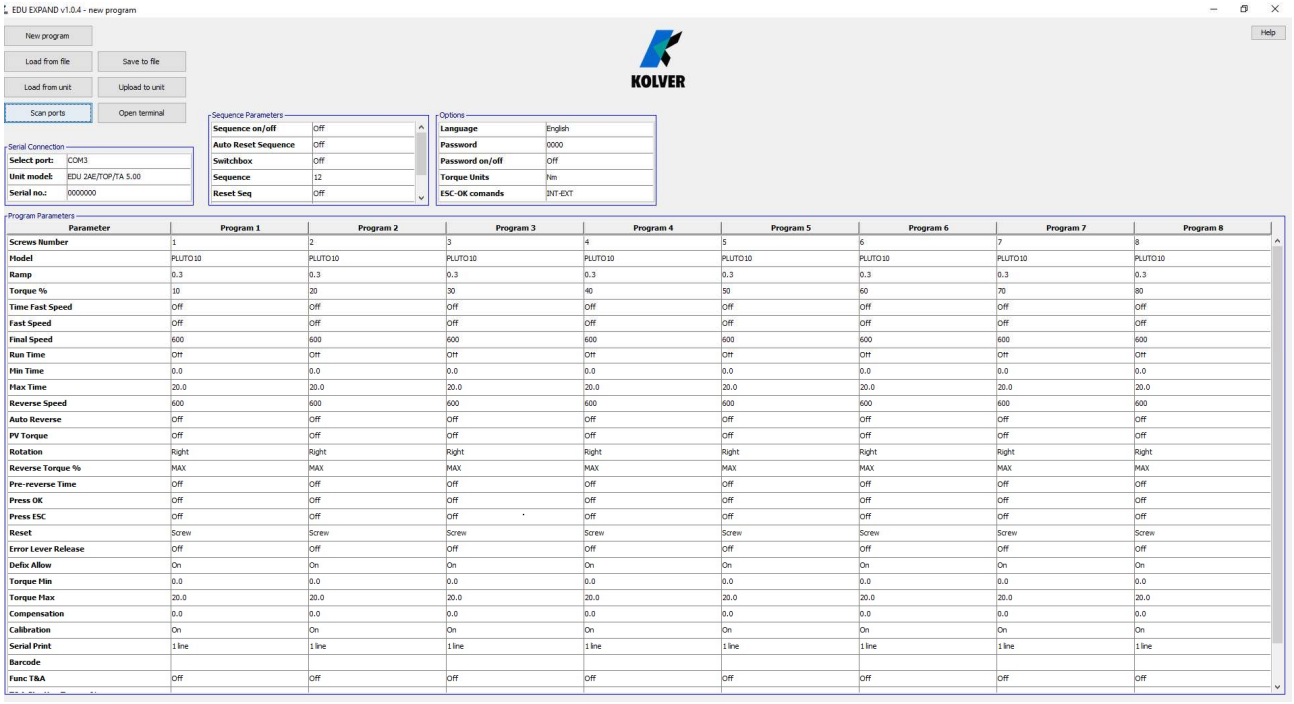

- To modify or enter any parameter values, double click a cell, select a number within the proper range, then press Enter. If the value is not within its valid range, pressing Enter will not confirm the change.

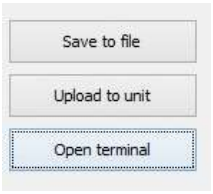

- **Save to file**: it saves all programs to a file. This file can be read directly from a USB drive connected to the unit on its front panel. In this case, the file name must be SETxx.KOL (xx = range from 00 to 99). This file could be copied in the USB drive and upload to the unit or recall with EDU EXPAND.

- **Upload to unit**: it uploads all the setting to the EDU control unit
Connect the unit to your computer through miniUSB or RS232. Switch the unit on.

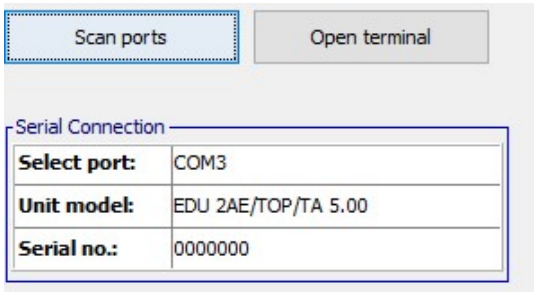

Click *Scan ports* to locate the unit. EDU EXPAND recalls the port, the model of the control unit and its serial number. Then click *Upload to unit*. The text *Programming…* will appear on the EDU display. When the text *Programming…*disappears, you may disconnect the cable.
Uploading can only be initiated if the control unit shows *Ready* on the main screen.

- **Open terminal**: to display the print string (see Serial Print). To save in a .txt file the results of each tightening, push Save.

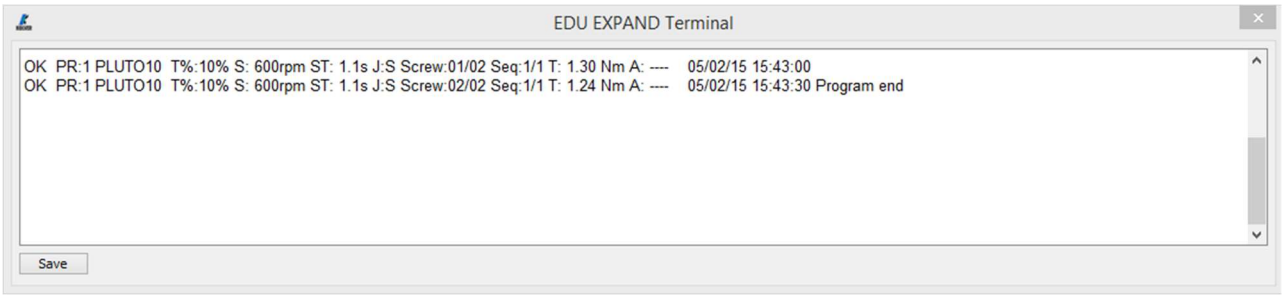

Report of the screwing done

- If you connect the USB drive to the control unit, the unit creates a folder where the report of the screwing done will be saved.
  The folder is named as the serial number of the unit.
  The text file which contains all the screwing data is named as the current date.

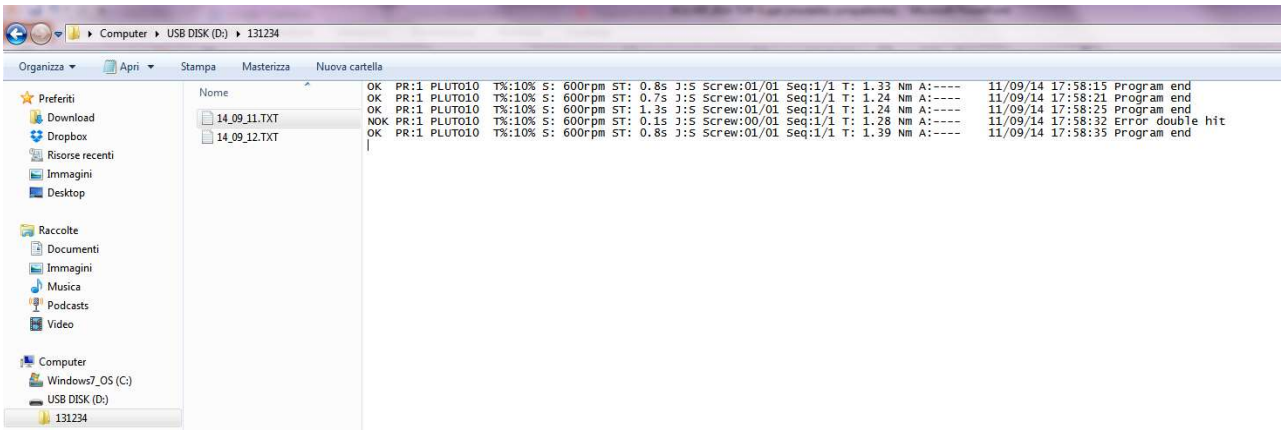

EXPLODED VIEW: EDU2AE/TOP 5.00

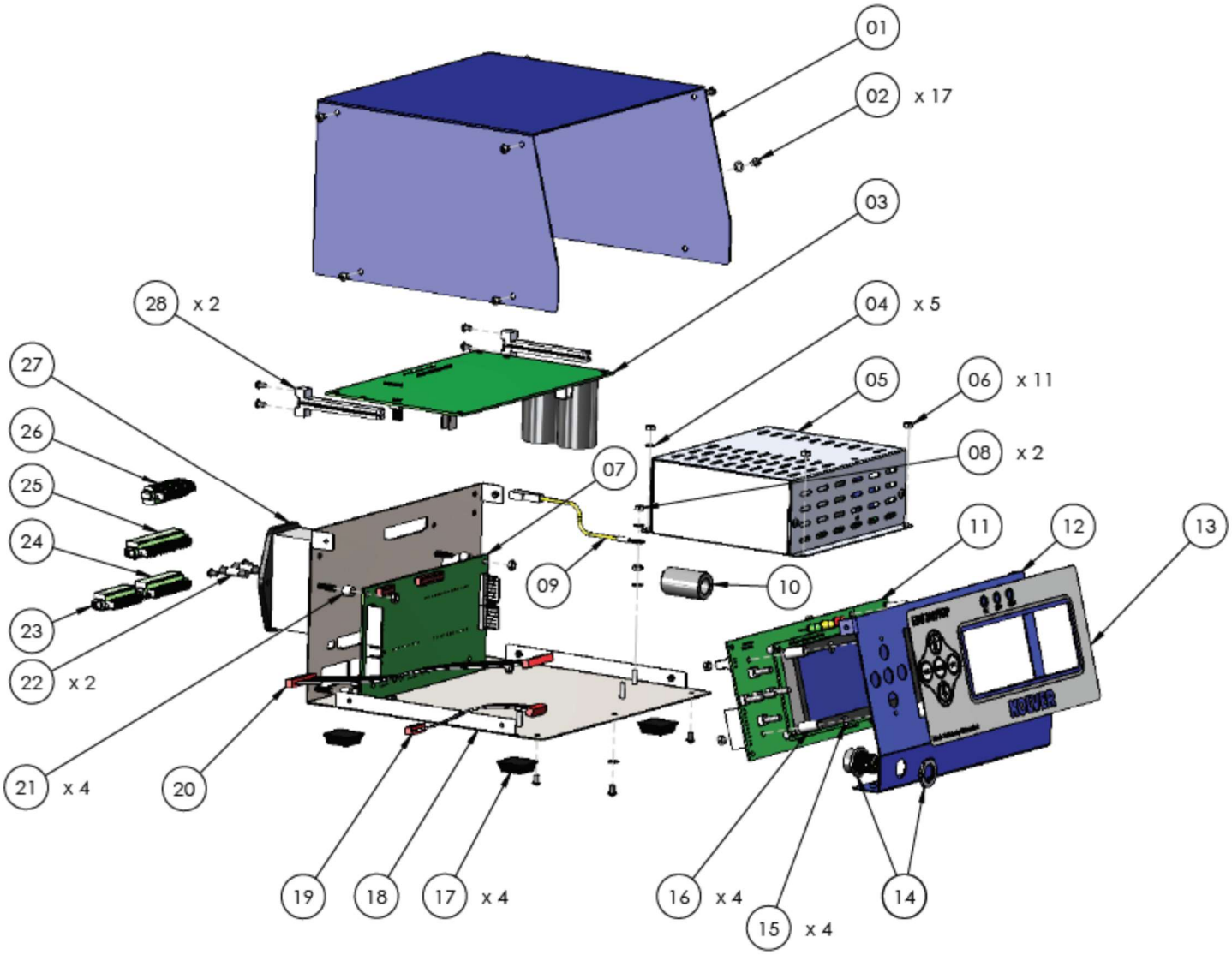

SPARE PARTS:

Position	Description	Quantity	Code
1	Upper panel EDU2AE/TOP	1	819003
2	3x5 Button head screw burnished TX10	17	872444
3	Motor board	1	852521/SW
4	M3 toothed washer	5	800041
5	Switching 48V 600W	1	872490
6	M3 burnished nut	11	800056
7	I/O EDU 2AE/TOP board	1	852525
8	M3 brass nut	2	800056/O
9	Ground cable	1	800090/E
10	Ferrite	1	872468
11	Display board EDU2AE/TOP	1	852526
12	Front panel EDU2AE/TOP	1	819002
13	Membrane EDU 2AE/TOP	1	819004
14	M12 5pin + nut + ferrite connector	1	201666/R1
15	M3 Washer h0,5 mm	4	800042
16	Spacer 15mm dest 4,8 mm	4	890004/T
17	Plastic support	4	800016/B
18	Bottom panel EDU2AE/TOP/SW	1	819001/SW
19	Flat cable 10 vie	1	819007
20	Flat cable 20 vie	1	872438/T
21	Spacer 6,3 mm dest 6.2mm	4	241003
22	Fuse 3.15A	2	800619
23	I/O Connector 9 pin spacing 3.81	1	800164
24	I/O Connector 11 pin spacing 3.81	1	800165
25	I/O Connector 14 pin spacing 3.81	1	800166
26	I/O Connector 10 pin spacing 3.81	1	800102
27	Filtered plug	1	800718
28	Main board support	2	872442
	Label	1	818006/SW
	Schuko Cable	1	800620

EXPLODED VIEW: EDU2AE/TOP/E 5.00

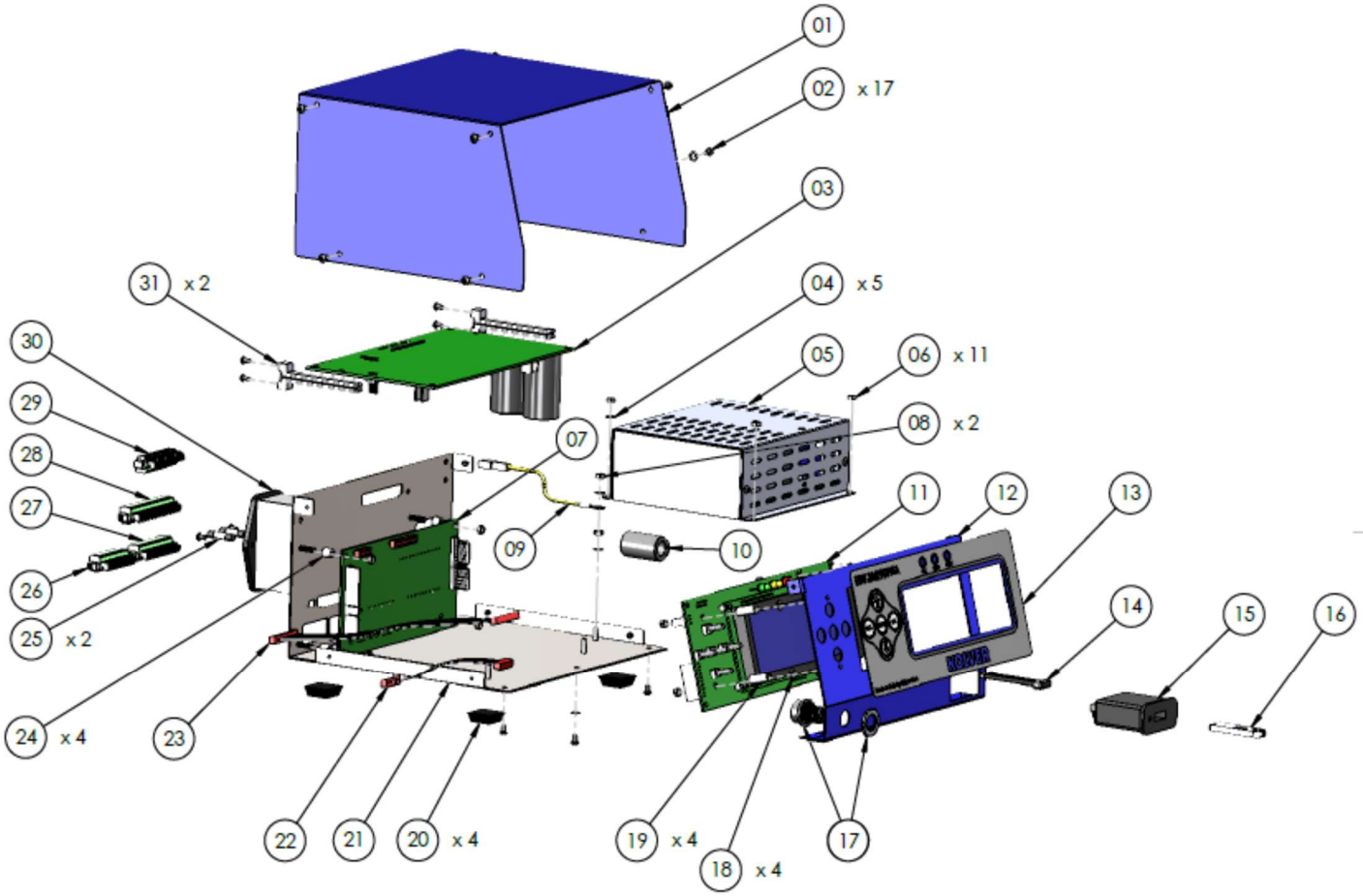

SPARE PARTS:

Position	Description	Quantity	Code
1	Upper panel EDU2AE/TOP	1	819003
2	3x5 Button head screw burnished TX10	17	872444
3	Motor board	1	852521/SW
4	M3 toothed washer	5	800041
5	Switching 48V 600W	1	872490
6	M3 burnished nut	11	800056
7	I/O EDU 2AE/TOP/E board	1	852525/E
8	M3 brass nut	2	800056/O
9	Ground cable	1	800090/E
10	Ferrite	1	872468
11	Display board EDU2AE/TOP	1	852526
12	Front panel EDU2AE/TOP /E	1	819002/USB
13	Membrane EDU 2AE/TOP/E	1	819004/USB
14	USB Flat cable	1	872474
15	USB Device	1	852424
16	USB Pen drive	1	872475
17	M12 5pin + nut + ferrite connector	1	201666/R1
18	M3 Washer h0,5 mm	4	800042
19	Spacer 15mm dest 4,8 mm	4	890004/T
20	Plastic support	4	800016/B
21	Bottom panel EDU2AE/TOP/SW	1	819001/SW
22	Flat cable 10 vie	1	819007
23	Flat cable 20 vie	1	872438/T
24	Sapcer da 6,3 mm dest 6.2mm	4	241003
25	Fuse 3.15A	2	800619
26	I/O Connector 9 pin spacing 3.81	1	800164
27	I/O Connector 11 pin spacing 3.81	1	800165
28	I/O Connector 14 pin spacing 3.81	1	800166
29	I/O Connector 10 pin spacing 3.81	1	800102
30	Filtered plug	1	800718
31	Main board support	2	872442
	Label	1	818006/SW
	Schuko Cable	1	800620

EXPLODED VIEW: EDU2AE/TOP/TA 5.00

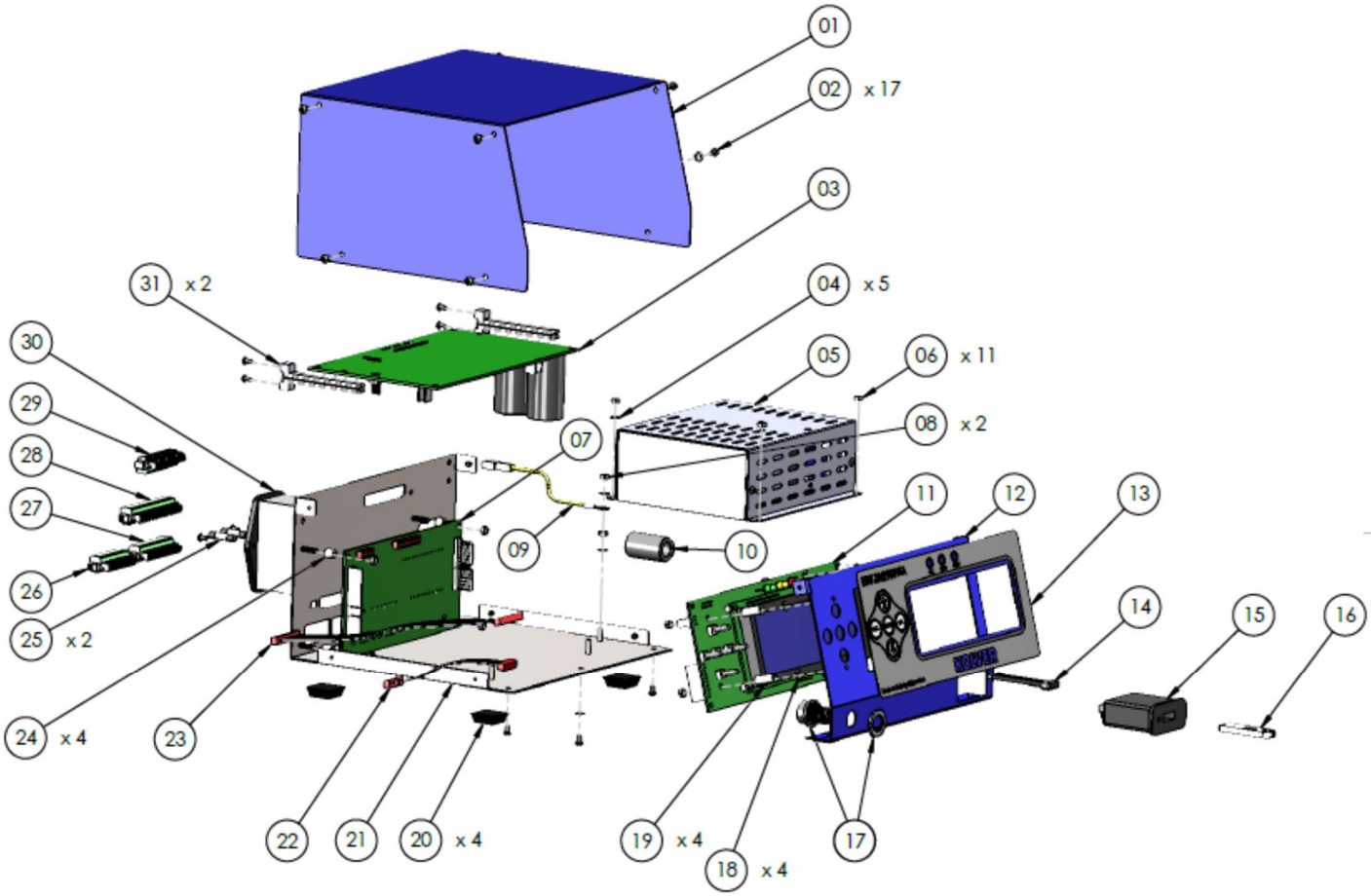

SPARE PARTS:

Posizione	Descrizione	Quantità	Codice
1	Upper panel EDU2AE/TOP	1	819003
2	3x5 Button head screw burnished TX10	17	872444
3	Motor board	1	852521/SW
4	M3 toothed washer	5	800041
5	Switching 48V 600W	1	872490
6	M3 burnished nut	11	800056
7	I/O EDU 2AE/TOP/TA board	1	852525/TA
8	M3 brass nut	2	800056/O
9	Ground cable	1	800090/E
10	Ferrite	1	872468
11	Display board EDU2AE/TOP	1	852526
12	Front panel EDU2AE/TOP /TA	1	819002/USB
13	Membrane EDU 2AE/TOP/TA	1	819006
14	USB Flat cable	1	872474
15	USB Device	1	852424
16	USB Pen drive	1	872475
17	M12 8pin + nut + ferrite connector	1	201766/LTA
18	M3 Washer h0,5 mm	4	800042
19	Spacer 15mm dest 4,8 mm	4	890004/T
20	Plastic support	4	800016/B
21	Bottom panel EDU2AE/TOP/SW	1	819001/SW
22	Flat cable 10 vie	1	819007
23	Flat cable 20 vie	1	872438/T
24	Sapcer da 6,3 mm dest 6.2mm	4	241003
25	Fuse 3.15A	2	800619
26	I/O Connector 9 pin spacing 3.81	1	800164
27	I/O Connector 11 pin spacing 3.81	1	800165
28	I/O Connector 14 pin spacing 3.81	1	800166
29	I/O Connector 10 pin spacing 3.81	1	800102
30	Filtered plug	1	800718
31	Main board support	2	872442
	Label	1	818006/SW
	Schuko Cable	1	800620

GUARANTEE

1. This KOLVER product is guaranteed against defective workmanship or materials, for a maximum period of 12 months following the date of purchase from KOLVER, provided that its usage is limited to single shift operation throughout that period. If the usage rate exceeds of single shift operation, the guarantee period shall be reduced on a prorata basis.
2. If, during the guarantee period, the product appears to be defective in workmanship or materials, it should be returned to KOLVER or its distributors, transport prepaied, together with a short description of the alleged defect. KOLVER shall, at its sole discretion, arrange to repair or replace free of charge such items.
3. This guarantee does not cover repair or replacement required as a consequence of products which have been abused, misused or modified, or which have been repaired using not original KOLVER spare parts or by not authorized service personnel.
4. KOLVER accepts no claim for labour or other expenditure made upon defective products.
5. Any direct, incidental or consequential damages whatsoever arising from any defect are expressly excluded.
6. This guarantee replaces all other guarantees, or conditions, expressed or implied, regarding the quality, the marketability or the fitness for any particular purpose.
7. No one, whether an agent, servant or employee of KOLVER, is authorized to add to or modify the terms of this limited guarantee in any way. However it’s possible to extend the warranty with an extra cost. Further information at kolver@kolver.it.

TABLE OF CONTENTS

Introduction and table of screwdriver models page 2
Main screen and front panel page 3
Main Menu page 4
Program Menu page 4
- Program number page 4
- Screws number page 4
- Model page 5
- Ramp page 5
- Torque page 5
- Compensation page 5
- Time Fast Speed page 6
- Fast Speed page 6
- Final Speed page 6
- Runtime page 6
- Minimum Time page 7
- Maximum Time page 7
- Pre- Reverse page 7
- Auto Reverse page 7
- Reverse Speed page 7
- Reverse Torque page 7
- PV Torque page 8
- Rotation page 8
- Press OK page 8
- Press ESC page 8
- Reset page 8
- Errore Lever page 8
- Defix allow page 8
- Show Torque page 8
- Compensation page 8
- Minimum Torque page 9
- Maximum Torque page 9
- Barcode page 9
- Serial Print On/Off page 9
- T&A Function Mode page 9
- Starting torque T&A page 10
- Minimum Angle page 10
- Maximum Angle page 10

Sequence Menu page 10
- Sequence Set page 10
- Sequence page 10
- External box page 10
- Barcode page 10
- Barcode Sequence page 11
- Reset Sequence page 11
- Automatic Reset Sequence page 11

Options Menu page 11
Unit Options page 11
- Language page 11

- Change Password page 11
- Password page 12
- ESC-OK-RESET page 12
- Unit (Nm, lbf.in, kgf.cm) page 12
- Torque Mode page 12
- Model Detect page 12
- Versions page 13
- Serial Number page 13
- Set time & date page 13
- Cycles page 13

USB Options page 13
- Read USB page 13
- Write USB page 13
- Info USB page 13

Torque Calibration page 16
USE OF T&A (Torque & Angle page 16
Torque-Speed Tables page 18
Interpretation of acoustic signales page 22
Connections/connector I/O page 22
Messages on display page 29
Trouble shooting page 30
Serial Print page 32
Expand page 33
Exploded views and spare parts lists page 36
Guarantee page 42

MANUAL
EDU 2AE/TOP/NT/TA
Torque range: 1.5-50 cNm

IDENTIFICATION DATA OF THE MANUFACTURER

KOLVER S.r.l.
VIA M. CORNER, 19/21
36016 THIENE (VI) ITALIA

IDENTIFICATION DATA OF THE PRODUCT

MODEL:	EDU2AE/TOP/NT/TA
CODE:	031000/TOP/NT/TA

TECHNICAL DATA OF THE PRODUCT

FUSE: 3,15 A
DIMENSIONS: 190 x 205 x h120 mm WEIGHT: 2,0 Kg

DECLARATION OF CONFORMITY

CE

KOLVER S.r.l. declares that the new tool here described: control unit model EDU2AE/TOP/NT/TA is in conformity with the following standards and other normative documents: 2006/42/CE, LVD 2014/35/UE, EMCD 2014/30/UE, EN 62841-2-2:2014, EN 62841-1: 2015, EN 60204-1, EN 61000-6-2, EN 61000-6-4.
It is also in conformity with RoHS III normative (2011/65/UE and following 2015/863).

Name: Giovanni Colasante
Position: General Manager
Person authorized to compile the technical file in Kolver

Thiene, January 1st 2021

Giovanni Colasante

EDU 2AE/TOP/NT/TA power supply and control units are an innovative system for controlling the torque of any current control NATO../TA electric screwdrivers.

EDU 2AE/TOP/NT/TA delivers all the advantages of precision torque control electric tools at a fraction of the price of transdurized tools.
The state-of-the-art electronic control circuit cuts the power supply to the motor calculating the correct torque in response to 3 parameters; voltage, frequency and current, according to the selected options.
The AC 90÷260V - 50÷60Hz power supply is converted into 40VDC required by the NATO series screwdrivers through a switching board.

Model	Torque (cNm)	Speed (rpm)	
		Min	Max
NATO15	1.5-25	100	700
NATO50	5-50	50	700

IMPORTANT: EDU2AE/TOP/NT/TA is a highly accurate unit but it is critically important to select the correct options to ensure that proper torque is being applied. Read the menu description carefully and in case you are unsure please contact Kolver for support information.

Turn the unit on through the on/off switch on the back panel. The unit will carry a general system check and the words "*waiting connection*" will appear on the last line of the display. If the connection with the motor control board is successful the following screen will be displayed:

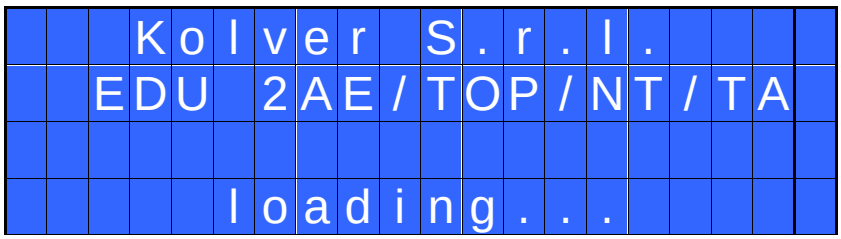

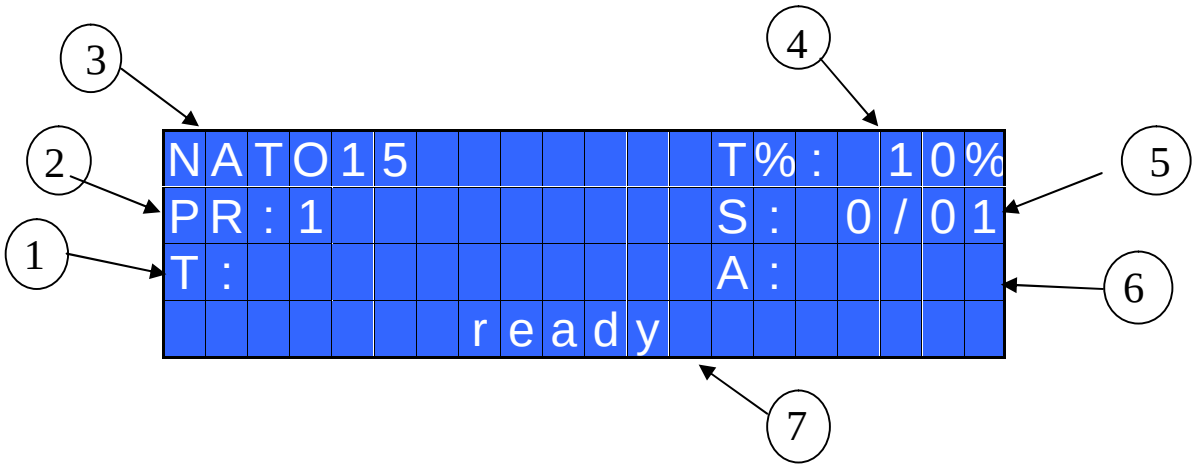

1- Reached torque level in Ncm, lbf.in or kgf.cm
2- Program number or sequence
3- Screwdriver model
4- Torque level in percentage
5- Screw count: done screws/total screws
6- Angle value in degrees
7- Status bar (ready, errors, etc…)

FRONT PANEL KEYBOARD

To enter the menu press the **ESC** key for 2 seconds.

Select the line by pressing ⇧ or ⇩ then press **OK** (the symbol ➔ will turn into ⮆). Press the ⇧ or ⇩ to select the required value and then confirm through **OK** (or **ESC** if you don't want to save the value).
The selected values will be immediately operational, even if you are still in the menu screen. Repeat the sequence for all the parameters you wish to change and then push **ESC** to return to the main screen.
Press **RESET** for 3 sec should you need to reset the screw, the program or the sequence. If you want to see all the set parameters press ⇧ for 2 seconds, however you cannot modify the displayed parameters on this screen.

LEDS ON FRON PANEL

GREEN LED VERDE: indication of *Screw OK*.

YELLOW LED: indication of *Programm End* or *Sequence End*.

RED LED: any indication of error.

MAIN MENU:

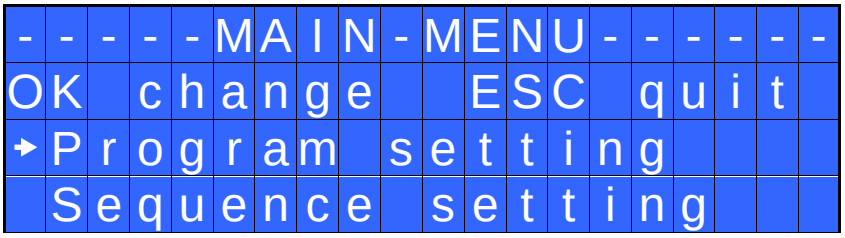

Program setting: It indicates the menu section where you can set or modify the fastening parameters.

IMPORTANT: To work with switch box, socket tray and remote it is mandatory to go to Sequence Menu (Ext Box: ON).

Sequence: It indicates the menu section where you can activate the sequence, the switchbox/socket tray and the bar code.

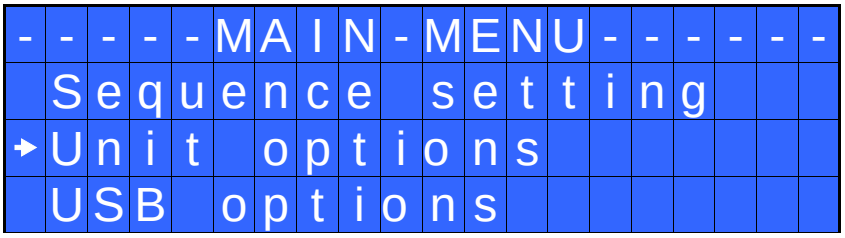

Unit Options: It indicates the menu section where you can set date and time, the password and the language.

USB Options: It indicates the menu section where you can view, upload and create programs setting of the control unit.

PROGRAM MENU:

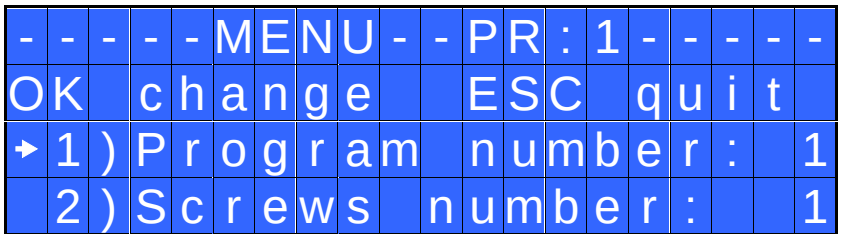

1) Program number: you can select/ modify the desired program from 1 to 8.

2) Screws number: The EDU2AE/TOP/NT/TA can act as screw counter. You can set the number of screws from 1 to 99. To disable the function press ⇩ until you get to OFF.
If the number of correct screws matches to the number of set screws, "*PROGRAM END*" will appear on the status bar and the yellow led will light up. If the "*Press OK*" is ON (see point 18), "*PROGRAM END*" will automatically disappear at next screwing or any time you enter the menu. Otherwise, press OK at the end of each program.
ATTENTION: Every time you enter the menu, the number of screws will reset.

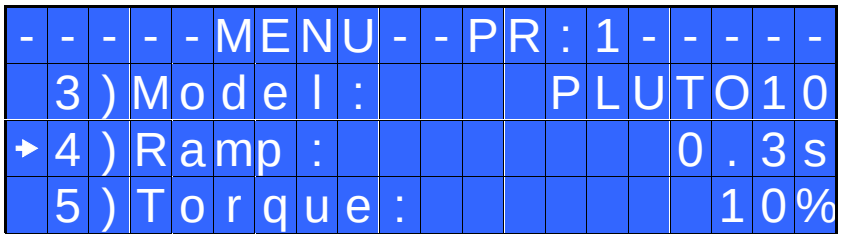

3) Model: you can select the screwdriver to be used. Your choice will automatically change the default settings. It's important to select the correct model you're going to use since most parameters regarding the motor software are specific to every single model.

IMPORTANT: For NATO..CA drivers, switch box, socket tray and remote it is mandatory to select ON on Ext. Box in Sequence Menu.

4) Ramp: You can select the slow start time (acceleration) from 0.2 to 3.0 sec. This option is only available for the screwing phase, while during the unscrewing phase the ramp time is always 0.2 sec. We suggest using this option with self tapping screws.

ATTENTION: Reaching the torque while the ramp is still on could give as result a different torque level from the one that results when the ramp is over. This is due to the motor acceleration.
Reaching the torque while the ramp is still on will activate the "screw OK" signal anyway (this option is useful if you need to tighten screws that are already tightened, the so called "double hit").
On the other hand, if you wish to see an error signal during the preset torque in the ramp phase, you can change the minimum time by setting value which is equal or superior to the ramp value (see point 7).

5) Torque: you can select the desired torque as a percentage of the torque range of the selected screwdriver. The torque range is always referred to the MAX speed. In case you're not working at maximum speed, the torque range will progressively lower in order to avoid motor stalling. If the torque level is reached correctly, it will be displayed and you will hear a beep sound, too.
Such torque level is indicated as " T: ..% " on the main screen.

6) Tm Fast Spd (Time Fast Speed): You can select any speed value of the screwdriver between nominal (maximum speed given in the catalogue) and the minimum speed of every single screwdriver (see table with technical data).
This function is available only if the Fast Speed is active.

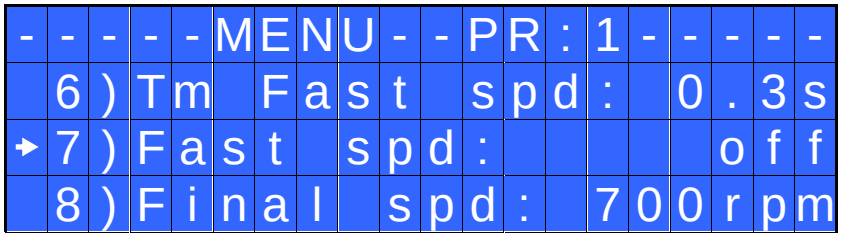

7) Fast spd (Fast Speed): It indicates how long the screwdriver should turn at the FAST SPEED speed (see point 8) before switching to "pre-set speed" (lower speed). The "pre-set speed" is the speed set at point 6. This FAST SPEED time can be set from 0.3 to 10.0 sec.
To disable the function press ⇩ until you get to OFF. In this case the screwdriver will automatically start at pre-set speed (see point 8).

CAUTION: The aim of the FAST SPEED is only to speed up the approach time in case of long screws. Reaching the torque at higher speed will result in inaccurate torque output. To avoid inaccurate torque values we suggest first to set a shorter time, and then increase it.
Torque reached during the FAST SPEED won't activate the torque signal and the message "*Error FAST SPEED*" will be displayed on the main screen and 2 beep sounds. The red led will turn on, too.

8) Final Spd (Final Speed): You can select the speed of the screwdriver during the FAST SPEED. It can be set between max speed and the pre-set one (see point 7).

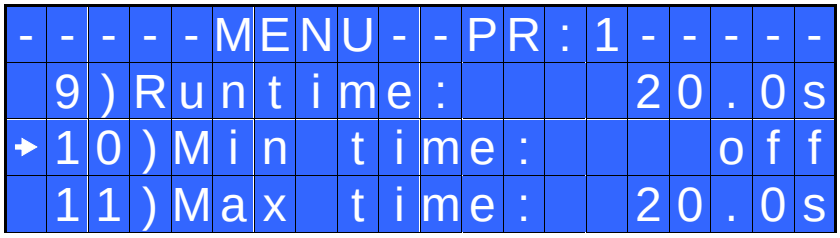

9) Runtime: You can set the time of a tightening, from OFF to 20.0 sec. When the pre-set time has been reached, it results in a torque signal.
The couple reached during this time results in a signal of *Correct screw*. If the correct screw signal is not required, set the Minimum time up to a value of 'Minimum Time -0.1sec'.

ATTENTION: Max Time must be set at 20.0 sec.

10) Min time - Minimum Time: You can select the minimum time of screwing from 0.1 sec to 'Max time - 0.1s'. To disable the function press ⇩ until you get to OFF (Min time = 0).
Torque reached below the minimum time won't activate the torque signal and will result in an error signal. "*Below minimum time*" will be displayed on the status bar and the red led will light up. You will hear two beep sounds, too.

11) Max time - Maximum time: You can select the maximum time of screwing. You can set from 'Min time + 0,1s' to 20.0 sec.
You also can set the Maximum time to OFF by pressing the ⇧ button when you have reached the value of 20.0s. In this case the screwdriver turns without any time limit.

ATTENTION: If torque isn't reached by the maximum time, the screwdriver will stop. "*Over maximum time*" will be displayed on the status bar and the red led will light up. You will hear two beep sounds, too.

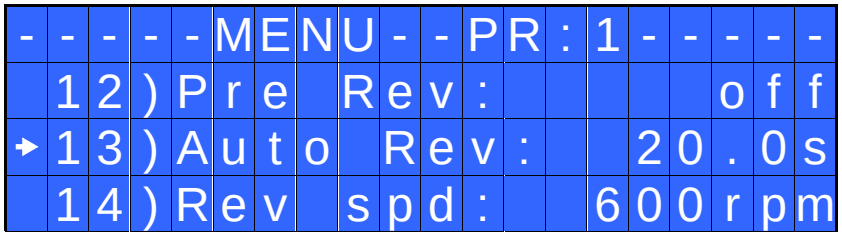

12) Pre-Rev.: pre-reverse. You can unscrew before tightening. This time can be set from OFF to 20.0 sec.

N.B. The speed and torque will be the same as those for the Auto Reverse.

13) Auto rev. – Auto reverse: This option will automatically start a reverse after a torque reached signal. You can set time from 0.1 to 20.0 sec.
To disable the function press ⇩ until you get to OFF.

ATTENTION: During the reverse, it is necessary to keep the lever or the start signal pressed as long as it doesn't stop. "*Correct screw*" will be displayed on the status bar and a green led will light up. You will hear one beep sound, too. In case the lever is released before the end of the reverse, "*unfinished screw*" will be displayed and a red led will light up. You will hear two beep sounds, too.

14) Rev spd - Reverse speed: You can select any reverse speed value of the screwdriver between the maximum and the minimum specific speed of every single screwdriver (see table with technical data).

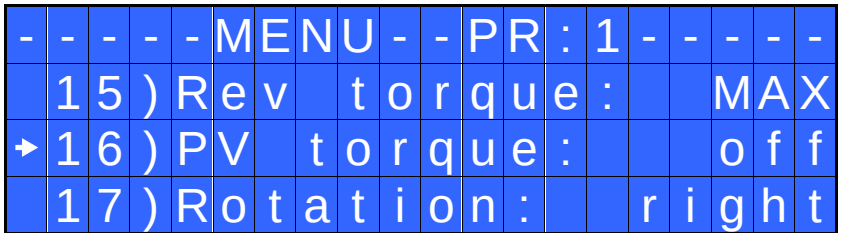

15) Rev torque – Reverse torque: You can select the desired reverse torque as a percentage of the torque range of the selected screwdriver (see point 2). If the torque is set on MAX, the reverse torque is about 20% higher than the possible maximum torque, so that it is always possible to unscrew a tightened screw (we suggest leaving this function on in normal use). If the setting is from MIN to 99% the reverse torque with the same percentage will be equal to the settings of the screwing phase.
ATTENTION: **If you're using open-end wrenches, the reverse torque has to be set to MIN value in order to bring the wrench back to the correct position.**

16) PV torque: Period of time in which the screwdriver works at **maximum torque** before switching to the torque that has been set by the user. You can set time from 0.1 to 10.0 sec.
To disable the function press ⇩ until you get to OFF.
This function overlaps other time settings (Fast Speed, ramp time, minimum time, maximum time) from the motor start on.

ATTENTION: This function is useful for applications where the prevailing torque is higher than the final torque (for example trilobal screws or locknuts).
Please use this function with utmost attention because an incorrect use can damage both the assembly and the screwdriver.
Torques reached during the max torque time won't activate the torque signal. "*Error pvt time*" will be displayed and the red led will light up. You will hear two beep sounds, too.

17) Rotation: You can choose between right tightening (standard screws) or left tightening (left threaded screws). All the other functions will adapt to the selected direction of rotation.

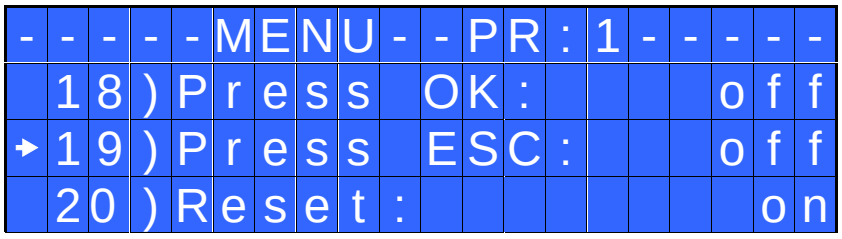

18) Press OK: when ON, press OK at the end of each screwing.
When OFF, the control unit resets automatically after a screwing.

19) Press ESC: when ON, press ESC to reset the control unit.
When OFF, the control unit resets automatically after an error signal.

20) Reset: you can reset the program or the single screw.

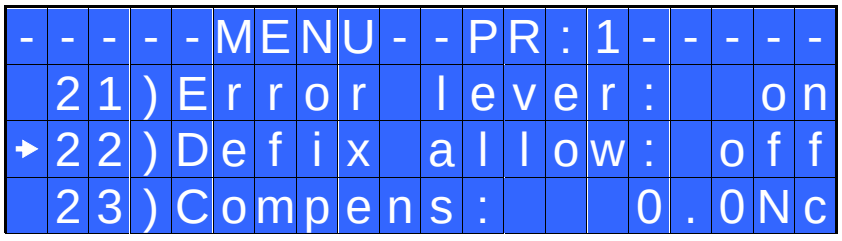

21) Error lever: when ON, an error signal will occur when the lever has released before reaching the torque.
When OFF, this function doesn't work.

22) Defix allow: when OFF, the reverse is NOT enabled.

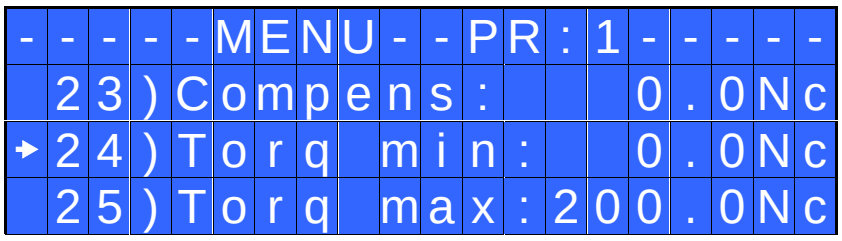

23) Compens – Compensation: This function allows an increase or decrease of the displayed torque value. The available range is from 0 to ±599.9 Ncm. For example: you make a screwing on your assembly and compare the displayed value to the value you see on a torque tester (for example a miniK/S model). Let's say you notice that the torque displayed in the unit EDU2AE/TOP/NT/TA is +2 Ncm higher than the value indicated on the tester (which is the right one). In this case you can modify this value by setting -2 Ncm so that the value on the display will be the same as the value on the tester. If it's lower than 3 Ncm, you need to set +3 Ncm and so on.

24) Torq min – Minimum torque: The minimum torque and maximum torque options allow the user to set the acceptable torque range for each single application. When the reached torque is within this range, "Screw OK" will be displayed on the status bar and the green led will light up. If the reached torque is outside this range, "error minimum torque" or "error maximum torque" will be displayed and the red led will light up. You can set the torque range from 0 to 'Torq Max-0.1 Ncm' in steps of 0.1 Ncm.
The minimum torque option allows to set the lowest value of the torque range.
The selection of the torque value is carried out by entering the digit cell by cell.

25) Torq max – Maximum Torque: The minimum torque and maximum torque options allow the user to set the acceptable torque range for the single application. When the reached torque is within this range, "Screw OK" will be displayed on the status bar and the green led will light up. If the reached torque is outside this range, "error minimum torque" or "error maximum torque" will be displayed. You can set the torque range from 'Torq Min+0.1 Ncm' to 599.9 Ncm at intervals of 0.1 Ncm.
The maximum torque option allows to set the highest value of the torque range.
The selection of the torque value is carried out by entering the digit cell by cell.

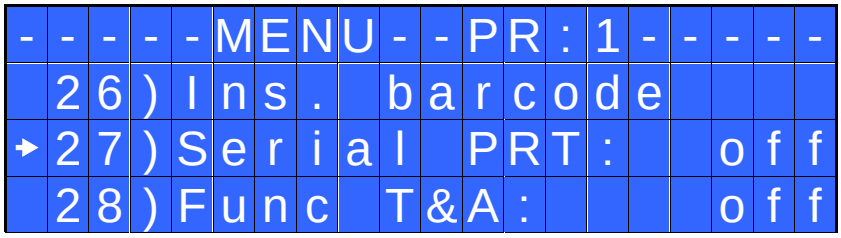

26) Ins. barcode: to scan a barcode and recall the desired program. To be used in combination with option 4. of the Sequence Menu.

27) Serial PRT: Serial print: from OFF to 5.
When OFF, no print.
If it is set up to 5, this value identifies the number of line feeds between a string and another.

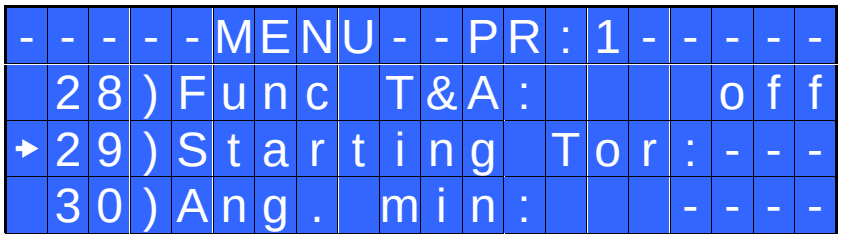

28) Func T&A–T&A function mode: You can activate the Torque & Angle function. Set OFF when you don't need this function. When you set ON you can choose among six working conditions (see T&A specific instructions).

29) Starting Tor – Starting torque: If T&A option is set on Tor mode (See T&A paragraph), you can set the torque threshold the angle starts to be read from. When T&A is set on angle mode (see T&A paragraph), you can set the torque threshold the angle starts to be carried out from.

30) Ang. min – Minimum angle: Minimum angle threshold. You can set it when T&A is set on Tor, T/in or T/lv (see T&A specific instructions). The minimum angle the operator can set is 5°.

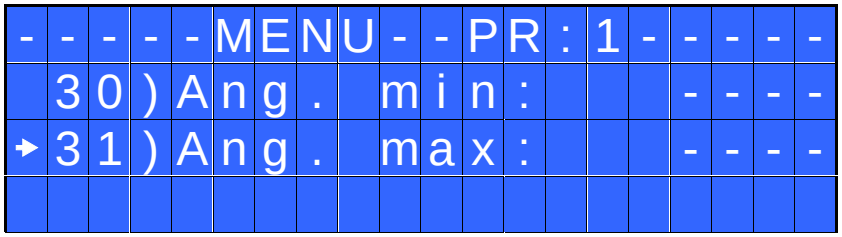

31) Ang. max - Maximum angle: Maximum angle threshold. You can set it when T&A is set on Tor, T/in or T/lv (see T&A specific instructions). The maximum angle the operator can set is 9720°.
When T&A is set on Ang., A/in or A/lv mode, maximum angle corresponds to the angle that has to be carried out.

SEQUENCE MENU:

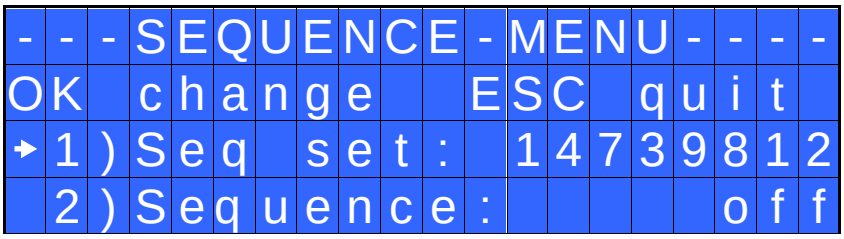

1) Seq set: you can set a sequence up to max. 8 programs.
To set the next program in the sequence, press OK.
Press ← to save the sequence and quit.

2) Sequence: to enable or disable the sequence. ON = enabled; OFF = disabled.

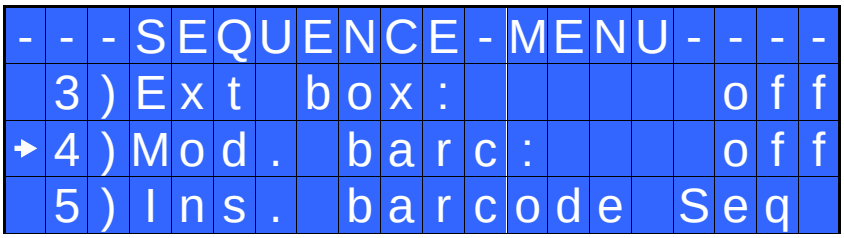

3) Ext box: It allows to enable or disable the external control.

IMPORTANT: It is mandatory to select ON to work with switch box, socket tray and remote.

4) Barc. mode: – Barcode mode: It allows to choose the barcode mode.

- **OFF:** barcode disabled.
- **ON prog:** you can select the program to be executed by scanning the bar code of the product. The unit compares the scanned code to the one previously entered in each program (see point 27: Barc. Set.). If the two codes match, the program is loaded; otherwise it will display *Error Barcode*. The scanned product code is also printed on the serial port of the control unit (see paragraph "*serial print*").
- **ON S.N.:** the product code is required before running a program or a sequence. The product code is printed on the serial port of the control unit.

- **ON Seq.**: you can set the Sequence by scanning its barcode. The code scanned is compared with the sequence entered in the menu (see point 5: Ins. Barcode Seq on Menu Sequence). If the two codes match, the sequence set is loaded, otherwise display "*Repeat scan*". The read code is also printed on the serial port of the control unit (see section Serial Print).

5) Ins. Barcode Seq: When ON on "Barc. Mode → ON Seq.", you have to scan the barcode to enable the Sequence. IMPORTANT: Barcode can be ONLY numeric.

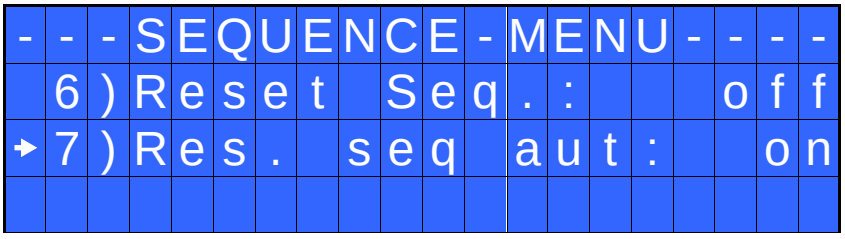

6) Reset seq.: When ON, you can reset the Sequence (pushing the Reset button).

7) Aut. res seq- Automatic Reset Sequence: When ON, the control unit automatically resets after the end of the sequence. When OFF it is necessary to press OK at the end of each sequence.

OPTION MENU:

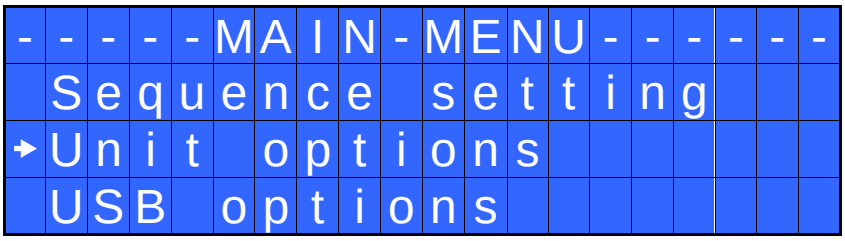

Unit Options:

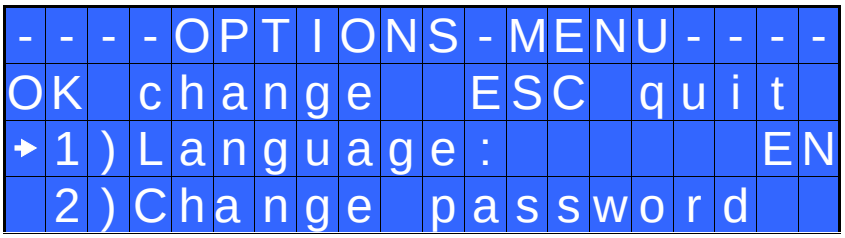

1) **Language:** This option allows to choose among the languages available: English, French, German, Italian, Spanish and Portuguese.

2) Change password: You can change password (see point 3).

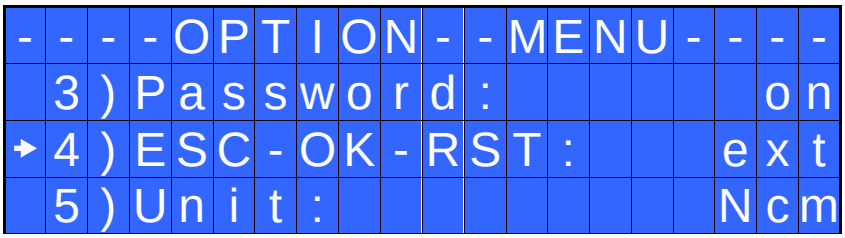

3) Password ON: When YES, you will be asked for the password to enter the menu. Otherwise select NO.

ATTENTION: Password is only asked to enter the menu the first time after switching the unit on.
The default password is: 0000.

4) ESC-OK-RST: Press ESC in case of error. Press OK at the end of a program or to reset a sequence or a program (see point 7: Reset).
When INT, the operator must press the required key on the front panel.
When EXT, functions can only be enabled through proper connections on the back panel (see paragraph I/O connections).
When INT+EXT you can press either he button on the front or on the back panel.

5) Unit: You can choose between the following units of measurements: Ncm, lbf.in and kgf.cm.

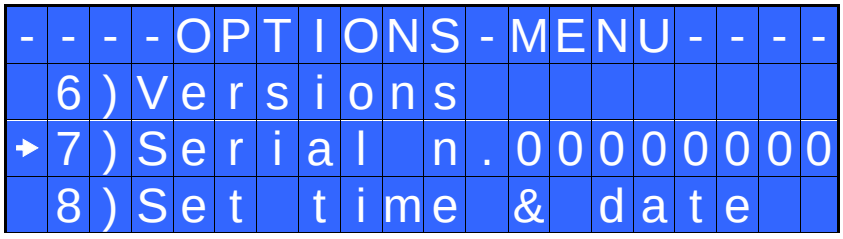

6) Versions: in this screen you can see the versions of boards mounted inside the unit.

7) Serial number: it is the indication number of the control unit. Default number: 0000000.
It could be the real serial number of the unit or another one you could choose (7 digits max).
This number will also be the name of the folder in the USB drive where you will save the report of your data (see EDU EXPAND part).

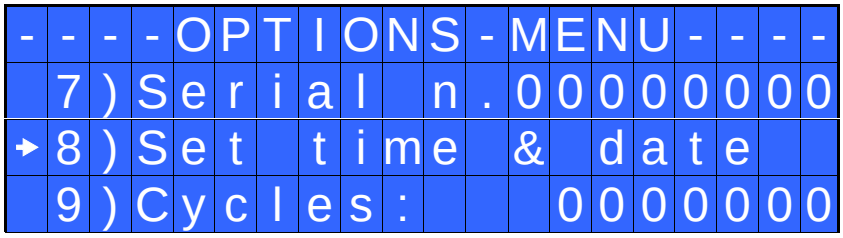

8) Set time & date: to set time and date on the control unit.

9) Cycles - Total number of cycles: It shows the number of tightened and loosened screws. This number can't be modified.

USB Options:

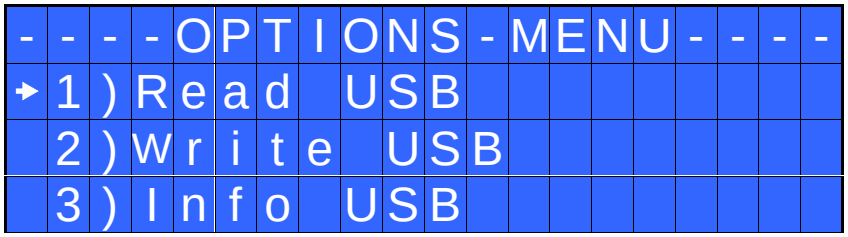

1) **Read USB**: press OK and read the USB drive and select the file SETxx.KOL you desire.
The EDU control unit recognizes only files as SETxx.KOL (see EDU EXPAND part).

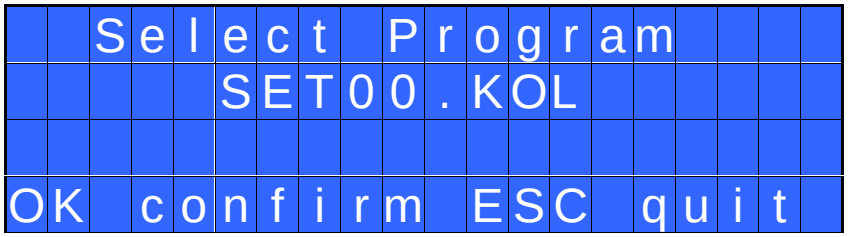

2) **Write USB:** press OK and create your new SETxx.KOL application where you save all the parameters you have set in the control unit.

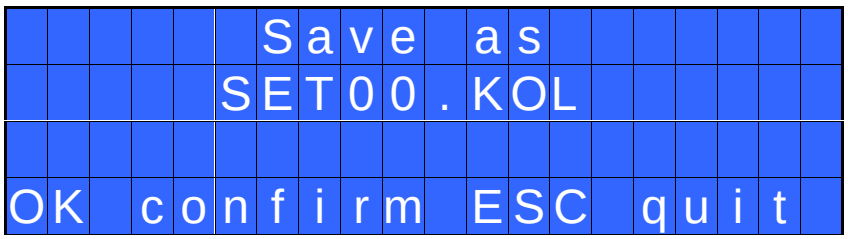

3) **Info USB:** press OK and see the loaded program.
You can see the loaded program only if you have saved the program in your USB drive as named as SETxx.KOL.

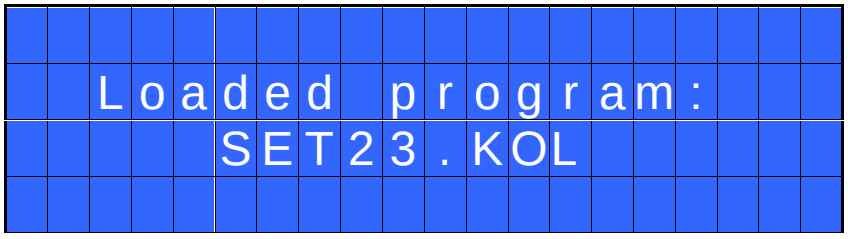

USE OF T&A (Torque & Angle)

Choose the T & A mode (see point 26: Modify function on the program menu)
It is possible to set 6 different modes:

- TORQUE (Torque): It's the most common use mode. The control unit shows the tightening torque and the torque starting from a certain torque percentage (threshold torque, see point 27). If the final torque and angle values are within the preset minimum and maximum values, the screw is correctly tightened. If the torque and/or angle are outside the preset values, the screw will be considered as incorrectly tightened. In this case the red led will light up and the message "*Error Max (Min) Angle*" or "*Error Max (Min) Torque*" will be displayed.

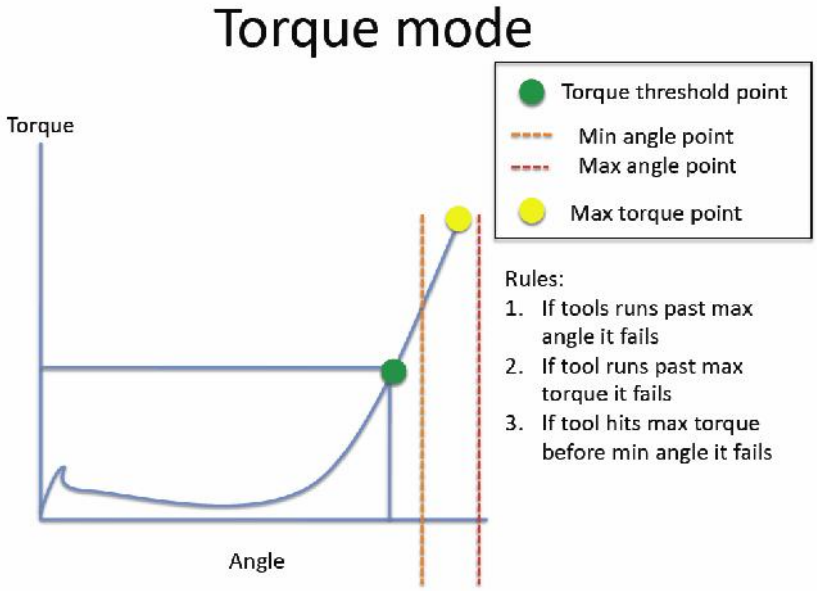

- TORQUE/INPUT (T/IN): It corresponds to *Torque* mode, except for the threshold torque which can't be set by the operator: in fact the value is the result of an external impulse through a proper contact (see paragraph "connections"). It can be very useful if the operator wants the control unit to start counting the angle from a position which is indicated by a precision instrument.

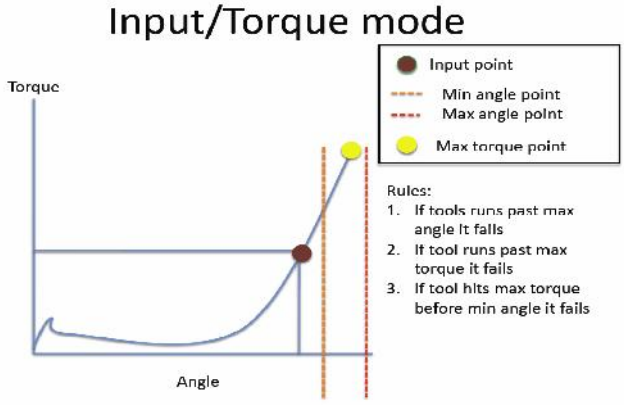

- TORQUE/LEVER (T/LV): No threshold is preset by the operator: the angle value that appears on the display corresponds to the angle that is carried out starting from the moment in which the lever is pressed until the torque is reached.

- ANGLE (Ang.): This mode gives priority to the angle to be reached. The value is measured starting from a tightening torque percentage.

Starting from the preset threshold torque (see point 27) the system will start counting the degrees and when the preset angle is reached the screwdriver will stop. If the preset angle is reached the screw will be considered as correctly tightened, the green led will light up and the message "*tightening OK*" will be displayed on the status bar. If the screwdriver stops before reaching the preset angle the tightening will be considered not ok, the red led will light up and the message "error angle not reached" will be displayed on the status bar. Therefore it's very important to set a torque value (line 4) which is sufficiently higher than the threshold value (line 27), so that the set value is reached before the screwdriver stops because of the reached torque.

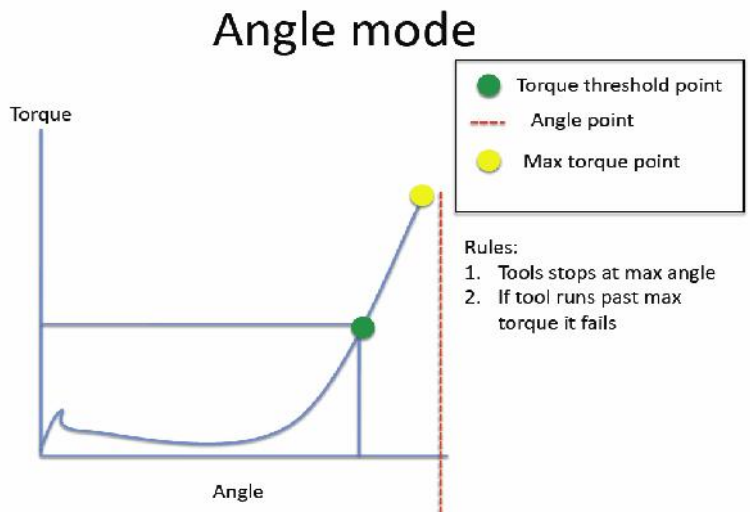

- ANGLE/INPUT (A/IN): The threshold can't be set by the operator: in fact the value is the result of an external impulse through a proper contact (see paragraph "connections").
  This function can be very useful if the operator wants the screw to rotate a certain number of degrees after reaching a position indicated by a precision instrument.

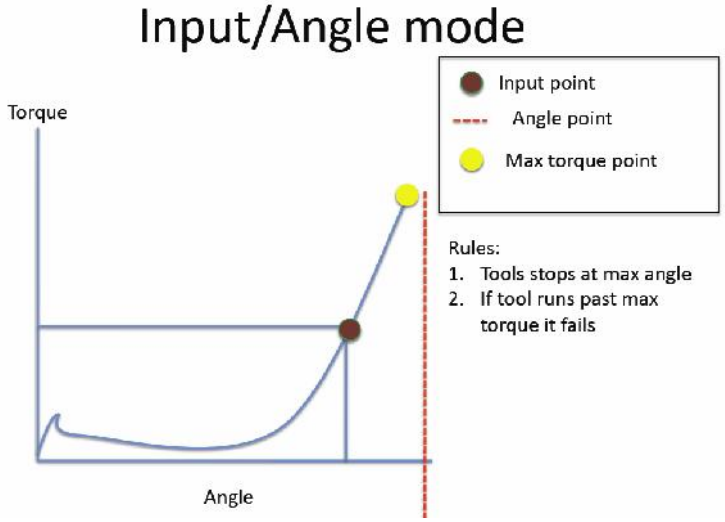

- ANGLE/LEVER (A/LV): the threshold torque value can't be set by the operator and the angle value that appears on the display corresponds to the angle that is carried out starting from the moment in which the lever is pressed.

INTERPRETATION OF ACOUSTIC SIGNALS

The control unit emits sounds which help you understand if the screwing has been carried out correctly or not. When the torque is reached meeting all the parameters set, the control unit utters a 0.5 sec beep as confirmation. In case of Program End, the unit will utter other two beeps. On the other hand, torque reached under min time, during the Ramp time or under the Fast Speed (see error signals on the display) will cause the control unit to utter three beep sounds.

I/O CONNECTIONS

EDU 2AE/TOP control unit series have connectors placed on the back panel. These connectors allow to enable functions through inputs and to take signals through outputs. The inputs are activated by connecting them to ground. A positive voltage must NEVER be brought to these inputs. Bringing 24V to the unit inputs could damage the inputs themselves. As seen from the picture below, to enable the inputs it is recommended to bring a clean contact by using a relay or a simple switch or button.

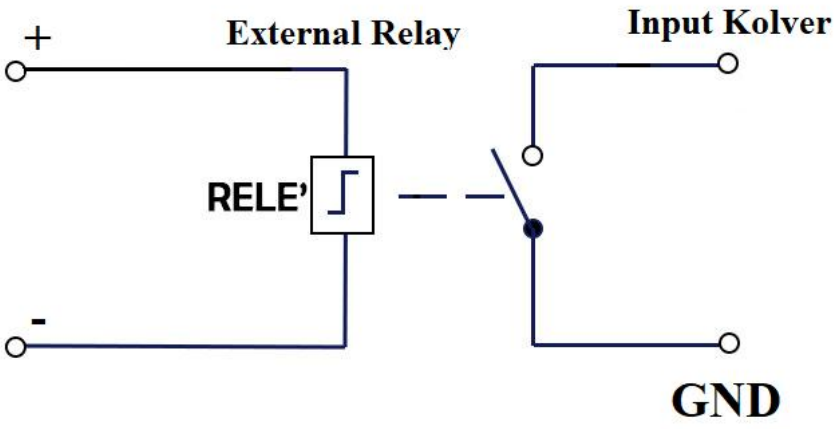

As for the outputs, they are all PNP type with active function. On each pin you will have 24V DC.

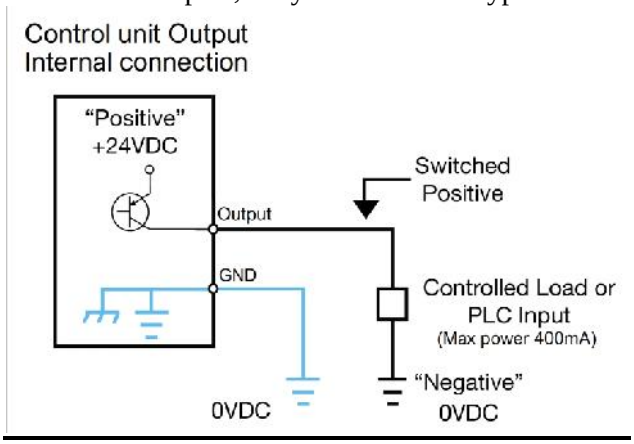

These pins can be used directly connected to PNP inputs (PLC) or used to turn on LEDs, buzzers or other devices with 24V power supply. The maximum total power of the outputs is about 400mA. Using inductive loads such as relays or other loads with an initial consumption peak greater than 400mA will send all outputs to protection, displaying the message "output disable". To restore the outputs after a protection, turn off and turn on the unit again.

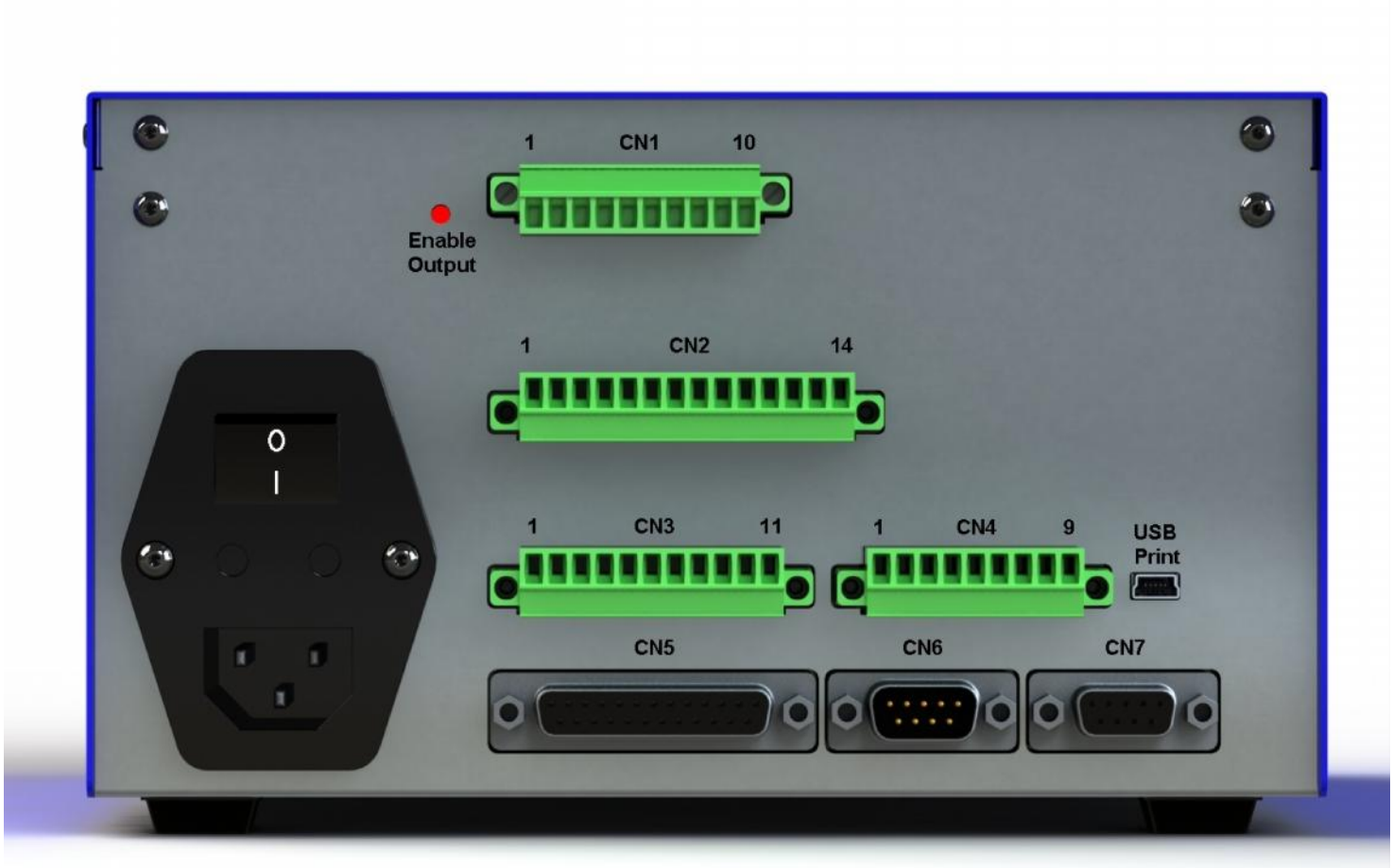

- CN1 CONNECTOR – 10 pins

It is situated on the upper part of the back panel.

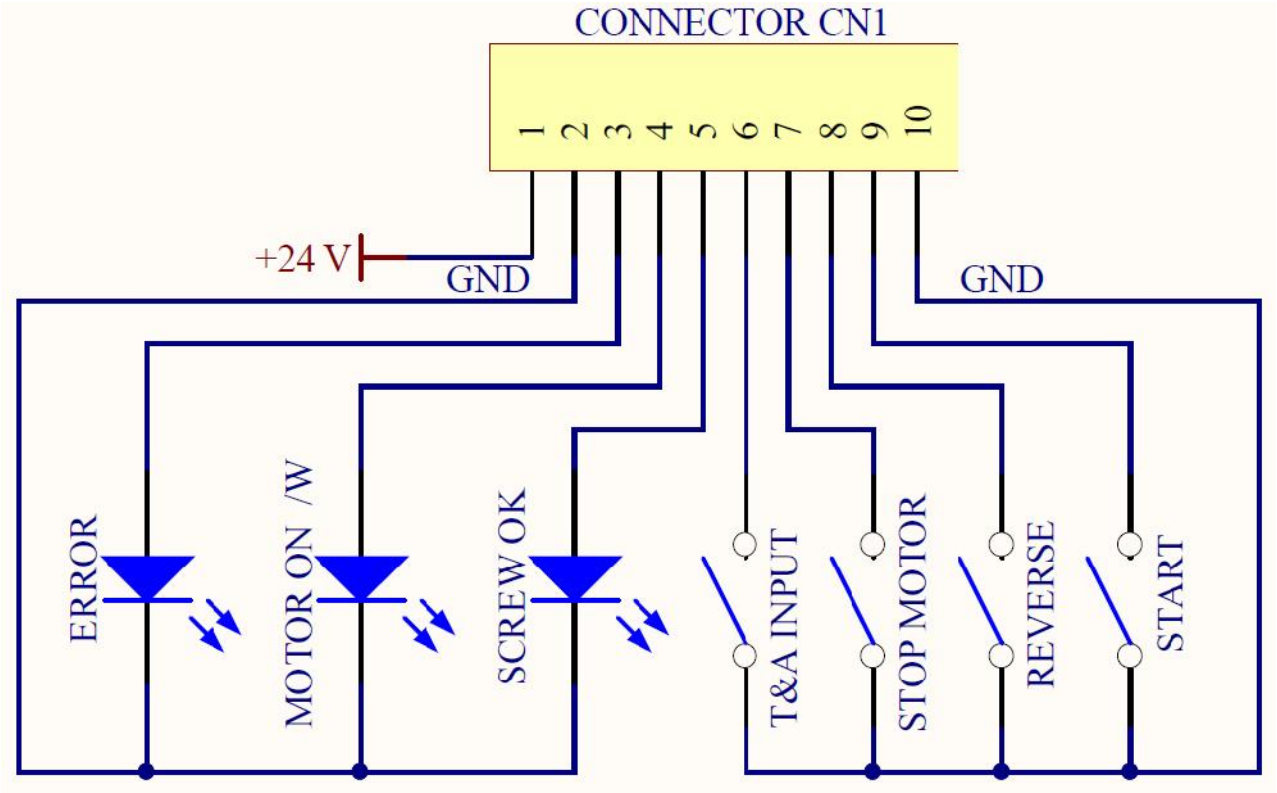

PIN	NAME	FUNCTION
		OUTPUT
1	+24V	+24V voltage protected. The maximum current consumption is 400mA. CAN NOT BE USED TO POWER EXTERNAL DEVICES.
2	GND	Common pin. Signals must be taken between this pin (GND and the respective signal pins (pin 3, 4 and 5).
3	ERROR	Error signal: it activates every time an error occurs. The red led on the front panel will switch on. Signal is 24V.
4	MOTOR ON (\W)	It activates when the motor turns during screwing. Signal is 24V.
5	SCREW OK	Correct screw signal. The green led on the front panel will switch on. Signal is 24V.
		INPUT
6	T&A INPUT	External input for making the control unit start to count the angle. It can be only used in A/IN and T/IN mode (see T&A paragraph)
7	STOP MOTOR	Remote motor stop. If it's activated the message "STOP MOTOR ON" appears on the display. The motor will stop and won't start working again as long as the contact is closed (as Input pin 1 of CN2).
8	REVERSE	Remote motor start with torque control while unscrewing.
9	START	Remote start with torque control while screwing.
10	GND	Common pin. The desired function is activated through a contact between this pin and one of the other pins.

- CN2 CONNECTOR – 14 pins

All of the following pins are input: make a contact with pin 14 to activate them.

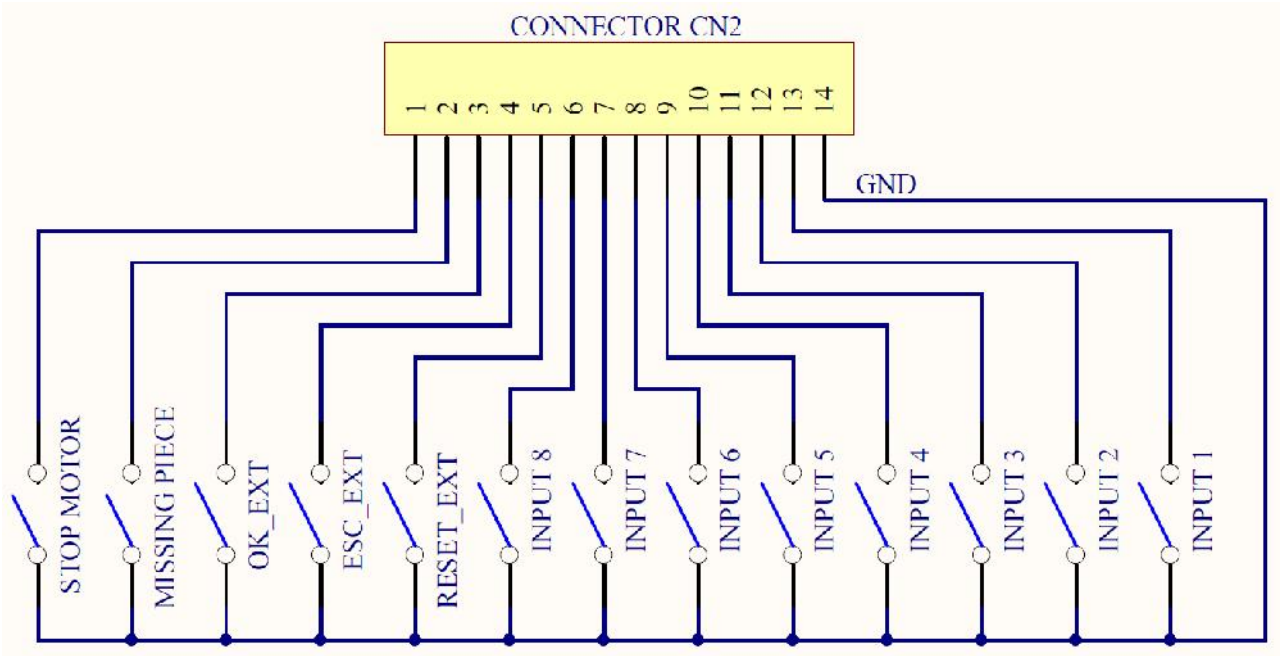

PIN	NAME	FUNCTION
1	STOP MOTOR	Remote motor stop. If it's activated the message "STOP MOTOR ON" appears on the display. The motor will stop and won't start working again as long as the contact is closed (as Input pin 1 of CN2).
2	MISSING PIECE	If enabled it stops the motor, enables the error signal and "*Error missing piece*" is displayed on the status bar.
3	OK EXT	If enabled (see point 4: OK-ESC commands, in the option menu), remote OK key function.
4	ESC EXT	If enabled (see point 4: OK-ESC, in the option menu), ESC key function to reser remote errors.
5	RESET EXT	If enabled (see point 4: OK-ESC commands, in the option menu), it resets program or sequence according to the preset function (see point 5: Reset, in the option menu)
6	INPUT 8	Switch – selection of program 8
7	INPUT 7	Switch – selection of program 7
8	INPUT 6	Switch – selection of program 6
9	INPUT 5	Switch – selection of program 5
10	INPUT 4	Switch – selection of program 4
11	INPUT 3	Switch – selection of program 3
12	INPUT 2	Switch – selection of program 2
13	INPUT 1	Switch – selection of program 1
14	GND	Common to every input. Signals have to be enabled making contact between the desired signal and this pin (GND) .

- CN3 CONNECTOR – 11 pins

All of the following pins are output.

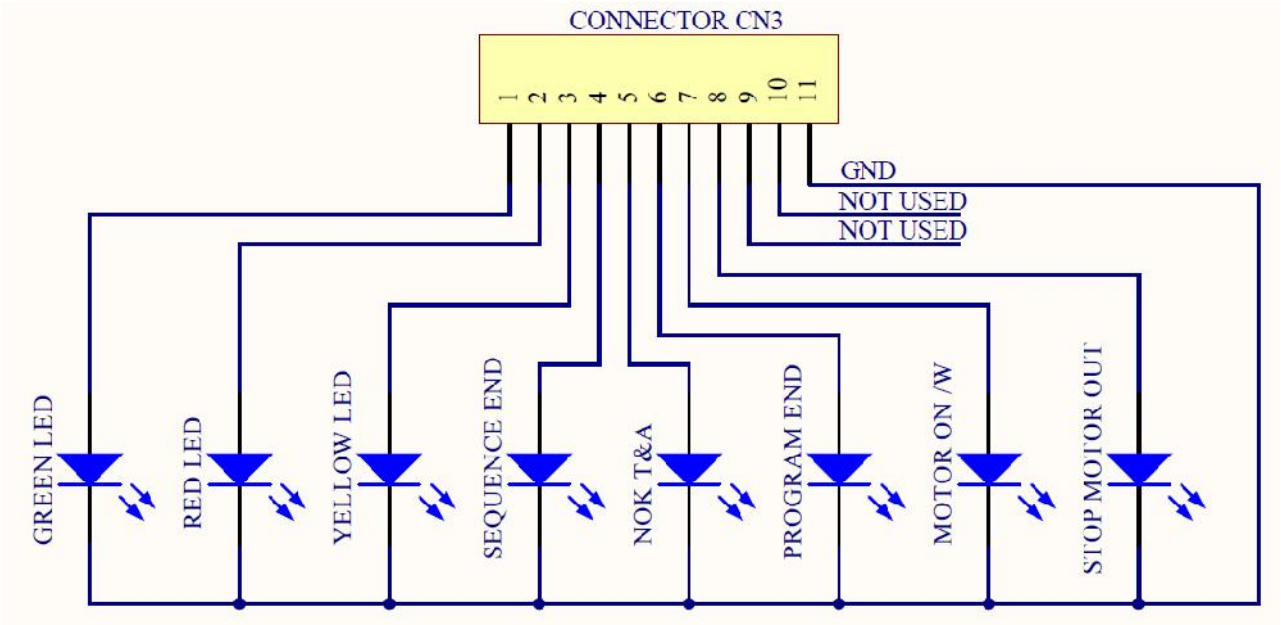

PIN	NAME	FUNCTION
1	GREEN LED	This signal works in parallel with the green led on the front panel.
2	RED LED	This signal works in parallel with the red led on the front panel.
3	YELLOW LED	This signal works in parallel with the yellow led on the front panel.
4	SEQUENCE END	It indicates the end of a sequence, if enabled.
5	NOK T&A	It activates if any angle error occurs.
6	PR OK	It activates at the end of each program.
7	MOTOR ON (\W)	It activates when the motor runs while tightening.
8	STOP MOTOR	It activates when stop motor is enabled.
9	NOT USED	
10	NOT USED	
11	GND	Common to every output. Signals have to be enabled making contact between the desired signal and this pin (GND).

- CN4 CONNECTOR – 9 pins

All of the following pins are output.

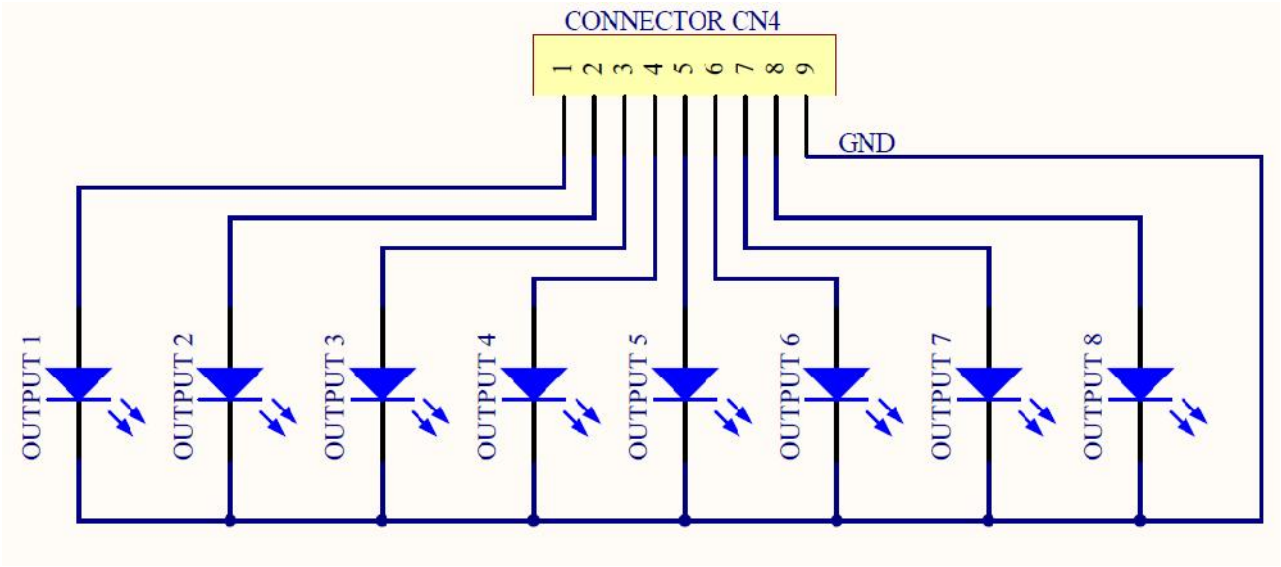

PIN	NAME	FUNCTION
1	OUTPUT 1	It indicates you're using program 1
2	OUTPUT 2	It indicates you're using program 2
3	OUTPUT 3	It indicates you're using program 3
4	OUTPUT 4	It indicates you're using program 4
5	OUTPUT 5	It indicates you're using program 5
6	OUTPUT 6	It indicates you're using program 6
7	OUTPUT 7	It indicates you're using program 7
8	OUTPUT 8	It indicates you're using program 8
9	GND	Common to every output. Signals have to be enabled making contact between the desired signal and this pin (GND).

- CN5 CONNECTOR (25 pin connector - female):

PIN	NAME	FUNCTION
1	GND	Common to every input. Signals have to be enabled making contact between the desired signal and this pin (common 0VDC).
2		Not used
3	STOP MOTOR OUT	It indicates stop motor is enabled
4	OUTPUT 8	It indicates you're using program 8
5	OUTPUT 7	It indicates you're using program 7
6	OUTPUT 6	It indicates you're using program 6
7	OUTPUT 5	It indicates you're using program 5
8	OUTPUT 4	It indicates you're using program 4
9	OUTPUT 3	It indicates you're using program 3
10	OUTPUT 2	It indicates you're using program 2
11	OUTPUT 1	It indicates you're using program 1
12	+24V	+24V available on this pin, they can't be used to charge external devices.
13	+5V	+5V available on this pin, it can't be used to charge external devices
14	OK EXT	If enabled (see point 4: OK-ESC, in the option menu), remote OK key function.
15	ESC EXT	If enabled (see point 4: OK-ESC, in the option menu), ESC key function to reset remote errors.
16	RESET EXT	If enabled (see point 4: OK-ESC, in the option menu), it resets program or sequence according to the preset function (see point 5: Reset, in the option menu).
17	INPUT 8	Switch – selection of program 8
18	INPUT 7	Switch – selection of program 7
19	INPUT 6	Switch – selection of program 6
20	INPUT 5	Switch – selection of program 5
21	INPUT 4	Switch – selection of program 4
22	INPUT 3	Switch – selection of program 3
23	INPUT 2	Switch – selection of program 2
24	INPUT 1	Switch – selection of program 1
25	+15V	+15V available on this pin, not used to charge external devices

- CN6 CONNECTOR (serial connector 9 pin - male) - FOR BARCODE CONNECTION

PIN	NAME	FUNCTION
1	+15V	+15V available on this pin, it can't be used to charge external devices.
2	RX	Serial reception.
5	GND	Common to every input. Signals have to be enabled making contact between the desired signal and this pin (GND)
9	+5V	Not used.

IMPORTANT: the barcode scanner to be used must have the following features: RS232 transmission with 9600baud, 8 data bits, 1stop bit, no parity, terminators CR-LF.

- CN7 CONNECTOR (9 pin serial connector - female) – PRINT FUNCTION

PIN	NAME	FUNCTION
1	+15V	Not used.
2	TX	Serial transmission.
3	RX	Serial reception.
5	GND	Common to every input. Signals have to be enabled making contact between the desired signal and this pin (GND).
9	+5V	Not used.

- **USB-PRINT CONNECTOR**

Only used to print data on PC (see dedicated paragraph).

ATTENTION: Output signals are protected from an appropriate circuit. Overload of the available signals (> 400 mA) or short circuit will result in the stop of the unit. To re-activate signals, it is necessary to switch off the unit for 5-6 seconds, check connections and output loads then switch the unit on.

CORRECT SCREWS MESSAGES ON DISPLAY

On the status bar it will display *"Screw OK"*.	A correct screwing has been performed, reaching the pre-set torque value.
On the status bar it will display "*Angle OK*".	A correct screwing has been performed, reaching the pre-set angle.
On the status bar it will display "*Runtime OK*".	A correct screwing has been performed, reaching the pre-set runtime.
On the status bar it will display "*Reverse torque OK"*	A correct screwing has been performed, reaching the pre-set reverse torque value.

TROUBLE SHOOTING

ERROR	PROBLEM	SOLUTION
0	"*waiting connection*" doesn't turn into "*loading*" after it's been switched on.	Contact the nearest Kolver dealer.
1	"*Error Torque Control*" is displayed on the status bar	Make a new screw. If the error persists, change the torque and speed settings.
2	"*Error Fast Speed*" is displayed on the status bar (the torque signal is displayed during the brake time).	
3	"*Reverse incomplete*" is displayed on the status bar (the displayed torque signal is correct but the set unscrewing is not complete).	
4	"*Pre-Reverse incompl*." is displayed on the status bar (the lever has been released before the runtime has been achieved)	
5	"*Under min time*" is displayed on the status bar (the torque signal is displayed below the pre-set minimum time).	
6	"*Over maximum time*" is displayed on the status bar (torque is not reached and the screwing time is over the preset maximum time).	
7	"*Error PV torque*" is displayed on the status bar (the torque signal is displayed inside the set maximum time).	
8	"*Error min torque*" is displayed on the status bar (the torque signal is displayed below the preset minimum torque).	
9	"*Error max torque*" is displayed on the status bar (the torque signal is displayed over the set maximum torque).	
10	"*Error min angle*" is displayed on the status bar (the torque signal is displayed below the set minimum angle).	

11	"*Error max angle*" is displayed on the status bar (The max preset angle has been reached. Only available in Tor, T/lv and T/in mode).	
12	"*Error angle not OK"* is displayed on the status bar (The preset angle hasn't been reached. Only available in Ang., A/lv and A/in mode).	
13	"*Warning! No piece*" is displayed on the status bar (The "missing piece" contact is enabled).	-check contact 2 on the CN2 connector
14	"*Compensation error*" is displayed on the status bar. A negative torque value is displayed due to a high negative compensation value.	- increase or decrease the compensation value
15	"R*eleased lever error*" is displayed on the status bar (The lever has been released while tightening).	Such error can be enabled or disabled through "PROGRAM-MENU" (see point 18 on the program menu).
16	"*Reverse torque error"* is displayed on the status bar (The torque signal is displayed while loosening, but only if it's set on "max").	- The screwdriver couldn't loosen - Avoid motor stalling - Loosening too heavy
17	"*Output Disabled*". Protection of output signals was activated after exceeding maximum load (400mA).	- Check the set load is not over the allowed maximum value - Restart the control unit to reset error
18	"*Over current Protect"* is displayed on the status bar (it happens in case of over current on mosfets)	- Decrease screwing time and check settings - Avoid motor stalling - Unscrewing too heavy - Joint too soft

ATTENTION: IF THE OK/ESC OPTION IS DISABLED, ERRORS RESET AT THE FOLLOWING SCREW/PROGRAM. OTHERWISE PRESS ESC. IF THE PROBLEM PERSISTS, PLEASE CONTACT YOUR NEAREST KOLVER DEALER.

SERIAL PRINT:

Every control unit is supplied with a 9 pin serial female connector (connection pin: PIN 2 = TX, PIN 3 = RX, PIN 5 = GND) and a mini USB connector. You can print the results of each screwing on a printer (for example Kolver model PRNTR1) and/or on PC (for example through Hyper Terminal or Realterm or any data transmission program or EDU EXPAND only on EDU2AE/TOP/NT/TA). You can also save those results on a USB device (only ver. 1.00.03). The transmission characteristics (only serial and USB) are the following: 9600 (bits per second), 8 (data bits), n (no parity), 1 (bits stop 1).
The print string is the following:

BARCODE	*RESULT*	*PROGRAM NUMBER*	*MODEL*	*TORQUE%*	*SCREWING TIME*	*SPEED*

SCREW	*SEQUENCE STAGE*	*TORQUE*	*ANGLE*	*DATE HOUR*	*NOTICE*

BC: Barcode = it begins with “BC:” and it’s followed by the code of the scanned product.

Result = screwing result: correct or incorrect.

OK = the torque has been correctly reached, all the selected parameters are satisfied and the control unit will give out a beep sound of 0.5 sec.

NOK = the torque has been reached during ramp time or Fast Speed (see error table). In this case, the unit will give out 2 beep sounds and the red led will light up.

PR: Program number = it indicates the running program.

Model = Model of screwdriver you’re using.

T%: Torque% = percentage of the set torque level.

S: Speed = preset speed value.

ST: Screwing time = it indicates the time of the screwing.

Screw: Number of screws = number of tightened screws/total number of screws.

Seq: Sequence stage = it indicates the stage of the sequence.

T: Torque = torque value.

A: Angle = angle value.

Notice = in case of program end, it prints “Program End”, in case of sequence end, it prints “Seq. end” or it indicates the type of error (see paragraph: trouble shooting).

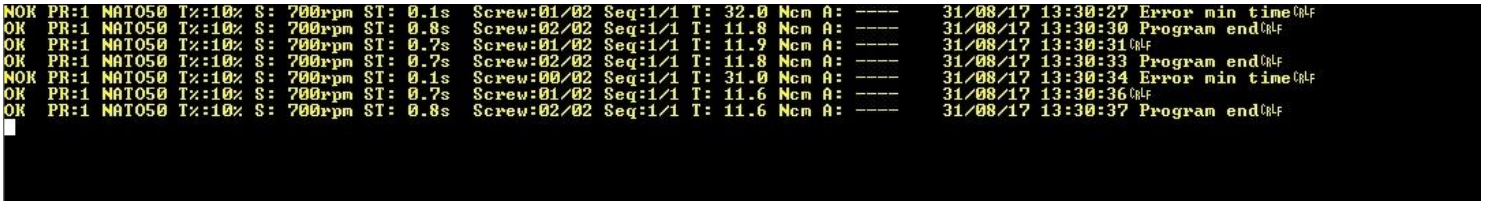

EDU EXPAND

EDU EXPAND is the software for pc created by Kolver to set, change and save all parameters of EDU2AE/TOP/NT/TA unit.

It communicates with the control unit via miniUSB or RS232 and makes you create up to 100 different settings configurations, save them on your USB drive and then recall on your EDU unit.

Just connect your USB drive to the port on the front panel of the EDU unit and recall the desired program on the menu (see Menu Options, USB Options).

At the same time the programs set on control unit can be downloaded on USB and recalled on another unit and on EDU EXPAND, too.

Here is a quick guide to use EDU EXPAND.

Double click the icon program and this is the main view.

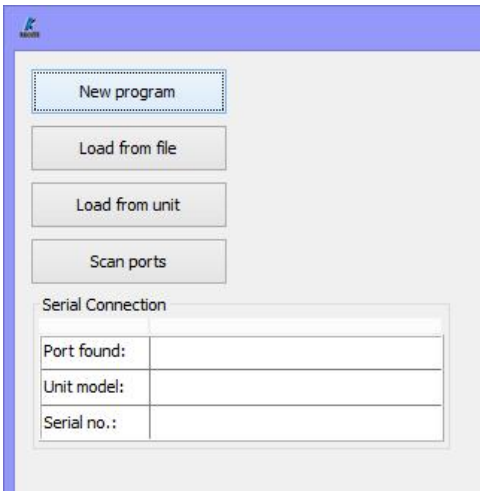

- **New program:** to load a new program.
- **Load from file**: it loads all programs, sequences and option settings from a previously saved file on your computer.
- **Load from unit**: it loads all program, sequence and option settings from the unit. The unit must first be connected to the pc using *Scan ports*.
- **Scan port**: it locates the unit. EDU EXPAND recalls the port, the model of the control unit and its serial number.

The control unit must be connected to the PC via miniUSB port or RS232 seat in the back panel of the unit.
If you cannot locate the control unit, make sure the unit and PC are connected properly or that the unit is on the initial screen of the Menu.

Here is the main screen when a program has been recalled or when you are creating a new one.

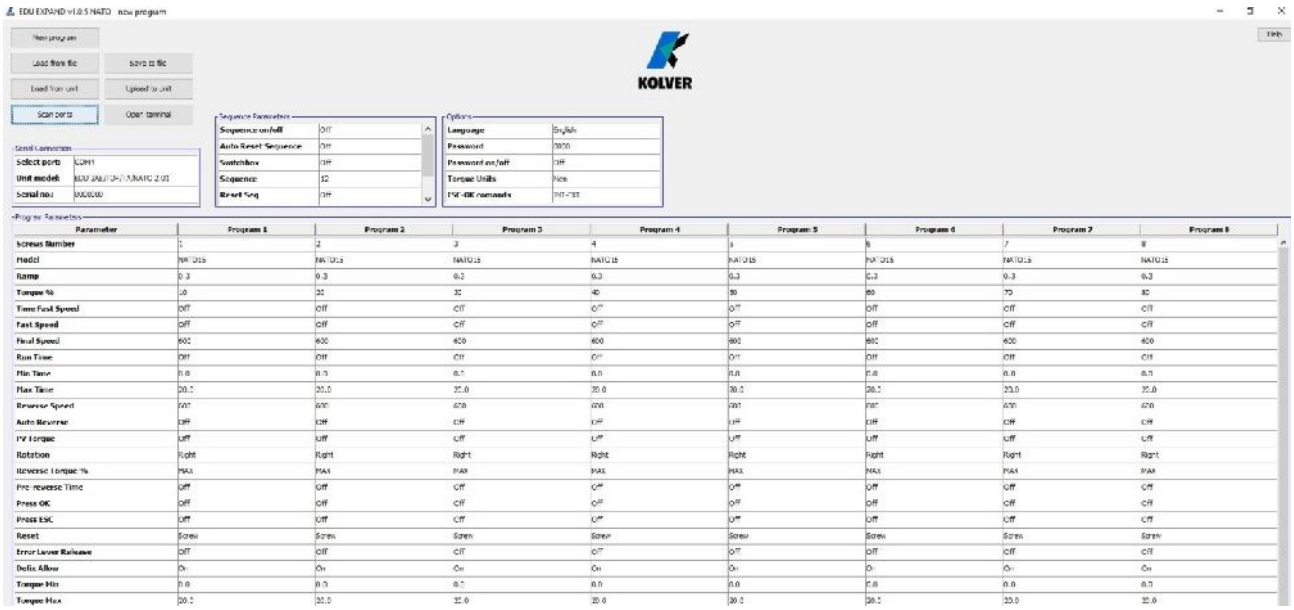

- To modify or enter any parameter values, double click a cell, select a number within the proper range, then press Enter. If the value is not within its valid range, pressing Enter will not confirm the change.

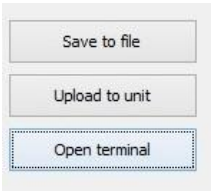

- **Save to file**: it saves all programs to a file. This file can be read directly from a USB drive connected to the unit on its front panel. In this case, the file name must be SETxx.KOL (xx = range from 00 to 99). This file could be copied in the USB drive and upload to the unit or recall with EDU EXPAND.

- **Upload to unit**: it uploads all the setting to the EDU control unit
  Connect the unit to your computer through miniUSB or RS232. Switch the unit on.

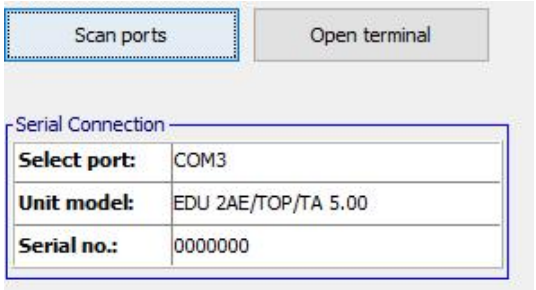

  Click *Scan ports* to locate the unit. EDU EXPAND recalls the port, the model of the control unit and its serial number. Then click *Upload to unit*. The text *Programming…* will appear on the EDU display. When the text *Programming…*disappears, you may disconnect the cable.
  Uploading can only be initiated if the control unit shows *Ready* on the main screen.

- **Open terminal**: to display the print string (see Serial Print). To save in a .txt file the results of each tightening, push Save.

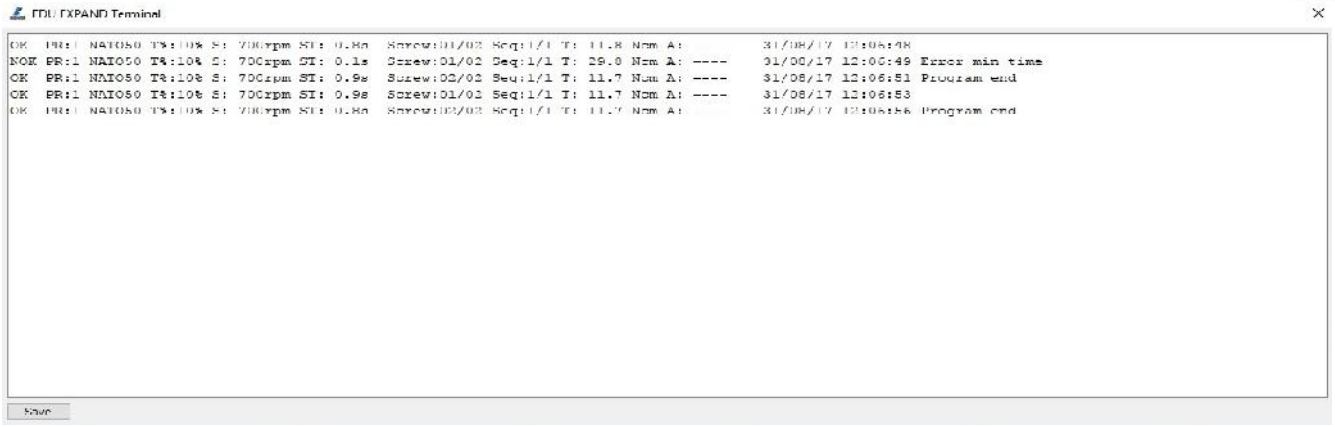

Report of the screwing done

- If you connect the USB drive to the control unit, the unit creates a folder where the report of the screwing done will be saved.
  The folder is named as the serial number of the unit.
  The text file which contains all the screwing data is named as the current date.

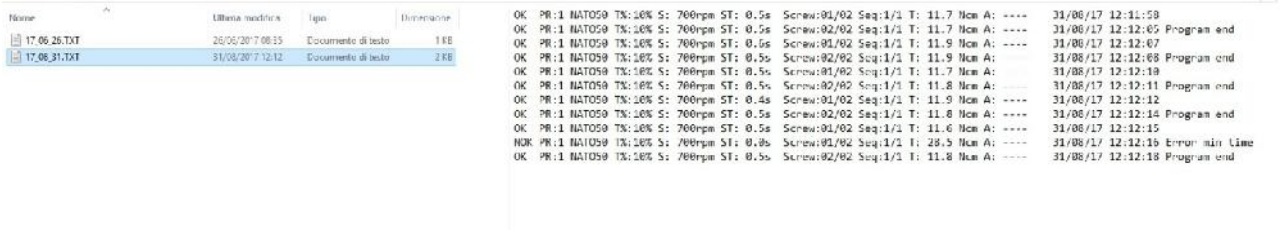

EXPLODED VIEW: EDU2AE/TOP/NT/TA

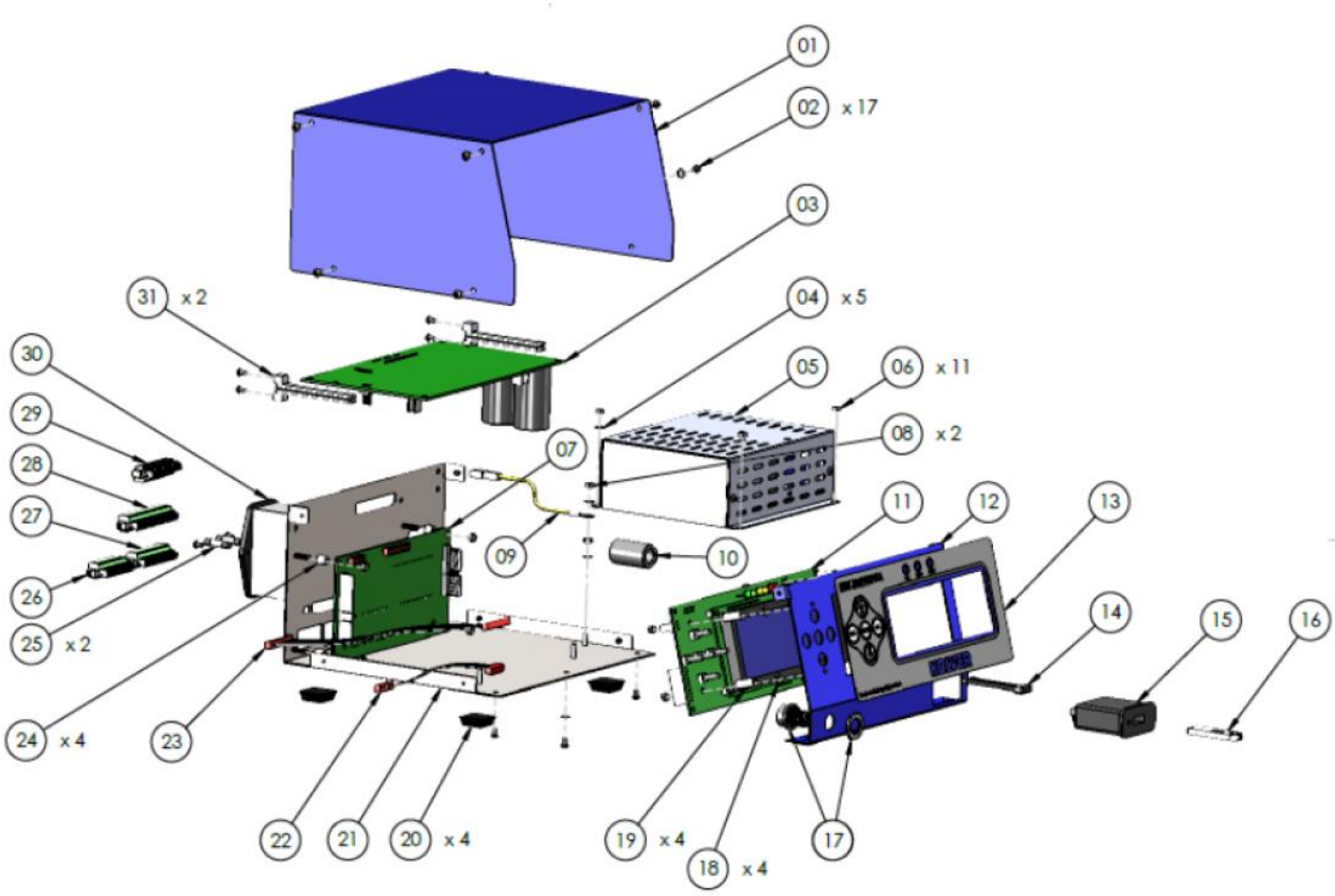

SPARE PARTS:

Posizione	Descrizione	Quantità	Codice
1	Upper panel EDU2AE/TOP	1	819003
2	3x5 Button head screw burnished TX10	17	872444
3	Motor board	1	852521/NT
4	M3 toothed washer	5	800041
5	Switching 31,3V	1	872490/NT
6	M3 burnished nut	11	800056
7	I/O EDU 2AE/TOP/TA board	1	852525/NT/TA
8	M3 brass nut	2	800056/O
9	Ground cable	1	800090/E
10	Ferrite	1	872468
11	Display board EDU2AE/TOP	1	852526
12	Front panel EDU2AE/TOP /TA	1	819002/USB
13	Membrane EDU 2AE/TOP/TA	1	819006/NT
14	USB Flat cable	1	872474
15	USB Device	1	852424
16	USB Pen drive	1	872475
17	M12 5pin + nut + ferrite connector	1	201766/LTA
18	M3 Washer h0,5 mm	4	800042
19	Spacer 15mm dest 4,8 mm	4	890004/T
20	Plastic support	4	800016/B
21	Bottom panel EDU2AE/TOP/SW	1	819001/SW
22	Flat cable 10 vie	1	819007
23	Flat cable 20 vie	1	872438/T
24	Sapcer da 6,3 mm dest 6.2mm	4	241003
25	Fuse 3.15A	2	800619
26	I/O Connector 9 pin spacing 3.81	1	800164
27	I/O Connector 11 pin spacing 3.81	1	800165
28	I/O Connector 14 pin spacing 3.81	1	800166
29	I/O Connector 10 pin spacing 3.81	1	800102
30	Filtered plug	1	800718
31	Main board support	2	872442
	Label	1	818006/SW
	Schuko Cable	1	800620

GUARANTEE

1. This KOLVER product is guaranteed against defective workmanship or materials, for a maximum period of 12 months following the date of purchase from KOLVER, provided that its usage is limited to single shift operation throughout that period. If the usage rate exceeds of single shift operation, the guarantee period shall be reduced on a prorata basis.
2. If, during the guarantee period, the product appears to be defective in workmanship or materials, it should be returned to KOLVER or its distributors, transport prepaied, together with a short description of the alleged defect. KOLVER shall, at its sole discretion, arrange to repair or replace free of charge such items.
3. This guarantee does not cover repair or replacement required as a consequence of products which have been abused, misused or modified, or which have been repaired using not original KOLVER spare parts or by not authorized service personnel.
4. KOLVER accepts no claim for labour or other expenditure made upon defective products.
5. Any direct, incidental or consequential damages whatsoever arising from any defect are expressly excluded.
6. This guarantee replaces all other guarantees, or conditions, expressed or implied, regarding the quality, the marketability or the fitness for any particular purpose.
7. No one, whether an agent, servant or employee of KOLVER, is authorized to add to or modify the terms of this limited guarantee in any way. However it’s possible to extend the warranty with an extra cost. Further information at kolver@kolver.it.

DICHIARAZIONE DI CONFORMITA'/
DECLARATION OF CONFORMITY

KOLVER S.r.l.
VIA MARCO CORNER, 19/21
36016 THIENE (VI) ITALIA

Dichiara che la macchina nuova qui descritta/ *Declare that the new screwdriver here described*: Avvitatore elettrico / *Electric screwdriver*:

PLUTO SERIE/ *SERIES*

È conforme alle disposizioni legislative che traspongono le direttivee le norme/ *Is in conformity with the following standards and other normative documents*:
2006/42/CE, LVD 2014/35/UE, EMCD 2014/30/UE, EN 62841-2-2:2014, EN 62841-1: 2015, EN 60204-1,
EN 61000-6-2, EN 61000-6-3 (con/*with* EDU2AE/TOP series),
EN 61000-6-2, EN 61000-6-4 (con/*with* EDU2AE series).
È conforme alla direttiva RoHS III (2011/65/UE e successiva 2015/863))/ *It is also in conformity with RoHS III normative (2011/65/UE and following 2015/863).*

Nome/*Name*: Giovanni Colasante
Posizione/*Position*: Amministratore
Delegato/*General Manager*

Persona incaricata a costituire il fascicolo tecnico presso la Sede/ *Person authorized to compile the technical file in Kolver*

Thiene, 1° gennaio 2021 *Giovanni Colasante*

Manuale Istruzioni/
Operator's Handbook

PLUTO

Avvitatori/ *Screwdrivers*

KOLVER S.r.l.
VIA MARCO CORNER, 19/21
36016 THIENE (VI) ITALIA
TEL +39 0445 371068
www.kolver.it

Vers. 190121

Modello/ *Model*	Codice/ *Code*	Coppia/ *Torque* (Nm)	RPM		Output	Unità di controllo/ *Control unit*
			Min	Max		
Pistola/ *Pistol grip* (PLUTO P)						
PLUTO 3P	130204	0,5-3,0	370	1300	Hex 1/4”	EDU2AE, $HP_{RO,}$ TOP/E, TOP
PLUTO 6P	130207	0,85-6,0	200	850		
PLUTO 10P/N	130210/N	1,5-10,0	110	600		
PLUTO 15P/N	130215/N	2,0-15,0	60	320		
Pistola con attacco dall’alto/ *Pistol grip with top connector* (PLUTO P/U)						
PLUTO 3P/U	130205	0,5-3,0	370	1300	Hex 1/4”	EDU2AE, $HP_{RO,}$ TOP/E, TOP
PLUTO 6P/U	130207/U	0,85-6,0	200	850		
PLUTO 10P/U/N	130210/U/N	1,5-10,0	110	600		
PLUTO 15P/U/N	130215/U/N	2,0-15,0	60	320		
Diritto/ *Inline* (PLUTO D)						
PLUTO 3D	130203	0,5-3,0	370	1300	Hex 1/4”	EDU2AE, $HP_{RO,}$ TOP/E, TOP
PLUTO 6D	130206	0,85-6,0	200	850		
PLUTO 10D/N	130211/N	1,5-10,0	110	600		
PLUTO 15D/N	130216/N	2,0-15,0	60	320		
PLUTO 20CA/SR	133221/SR	3,0-20,0	50	200	Sq 3/8 "	
PLUTO 35CA/SR	133236/SR	3,0-35,0	40	140	Sq 3/8 "	
PLUTO 50CA/SR	133250	5,0-50,0	20	90	1/2”	
Automazione/ *For automation* (PLUTO CA)						
PLUTO 3CA	130303	0,5-3,0	370	1300	Hex 1/4”	EDU2AE, $HP_{RO,}$ TOP/E, TOP
PLUTO 6CA	133206	0,85-6,0	200	850		
PLUTO 10CA/N	130211/N	1,5-10,0	110	600		
PLUTO 15CA/N	133216/N	2,0-15,0	60	320		
PLUTO 20CA	133221	3,0-20,0	50	200	Sq 3/8 "	
PLUTO 35CA	133236	3,0-35,0	40	140	Sq 3/8 "	
PLUTO 50CA	133250	5,0-50,0	20	90	Sq 1/2”	
PLUTO 3CA/FN2	130303/FN2	0,5-3,0	370	1300	Sq 3/8 "	
PLUTO 6CA/FN2	133206/FN2	0,85-6,0	200	850	Sq 3/8 "	
PLUTO 10CA/FN2	130211/FN2	1,5-10,0	110	600	Sq 3/8 "	
PLUTO 15CA/FN2	133216/FN2	2,0-15,0	60	320	Sq 3/8 "	
PLUTO 20CA/FN	133221/FN	3,0-20,0	50	200	Sq 3/8 "	
PLUTO 35CA/FN	133236/FN	3,0-35,0	40	140	Sq 3/8 "	
PLUTO 50CA/FN	133250/FN	5,0-50,0	20	90	Sq 1/2”	
Con testina ad angolo/ *With angle head* (PLUTO ANG)						
PLUTO 3 ANG	130203/A	0,5-3,0	370	1300	Hex 1/4”	EDU2AE, $HP_{RO,}$ TOP/E, TOP
PLUTO 6 ANG	130206/A	0,85-6,0	200	850	Hex 1/4”	
PLUTO 8 ANG	130208	1,0-8,0	110	600	Hex 1/4”	
PLUTO 15 ANG	130216/A	2,0-13,0	100	320	Sq 3/8 "	
PLUTO 20 ANG/SR	133220	3,0-18,0	60	200	Sq 3/8 "	
PLUTO 30 ANG	133231	6,0-30,0	30	130	Sq 3/8 "	
PLUTO 45 ANG	133245	10,0-45,0	25	90	Sq 1/2”	
PLUTO 70 ANG	133270	15,0-70,0	25	50	Sq 1/2”	
Coppia Angolo/ *Torque & Angle* (PLUTO TA)						
PLUTO 3D/TA	130203/TA	0,5-3,0	370	1300	Hex 1/4”	EDU2AE/ TOP/TA
PLUTO 3P/TA	130204/TA	0,5-3,0	370	1300		
PLUTO 3CA/TA	130303/TA	0,5-3,0	370	1300		
PLUTO 6D/TA	130206/TA	0,85-6,0	200	850		
PLUTO 6P/TA	130207/TA	0,85-6,0	200	850		
PLUTO 6CA/TA	133206/TA	0,85-6,0	200	850		
PLUTO 10D/TA	130211/TA	1,5-10,0	110	600		
PLUTO 10P/TA	130210/TA	1,5-10,0	110	600		
PLUTO 10CA/TA	133211/TA	1,5-10,0	110	600		
PLUTO 15D/TA	130216/TA	2,0-15,0	60	320		
PLUTO 15P/TA	130215/TA	2,0-15,0	60	320		
PLUTO 15CA/TA	133216/TA	2,0-15,0	60	320		
PLUTO 20CA/TA	133221/TA	2,0-18,0	50	200	Sq 3/8 "	
PLUTO 20CA/SR/TA	133221/SR/TA	2,0-18,0	50	200	Sq 3/8 "	
PLUTO 35CA/TA	133236/TA	2,0-35,0	40	140	Sq 3/8 "	
PLUTO 35CA/SR/TA	133236/SR/TA	2,0-35,0	40	140	Sq 3/8 "	
PLUTO 50CA/TA	133250/TA	5,0-50,0	20	90	Sq 1/2”	
PLUTO 50CA/SR/TA	133250/SR/TA	5,0-50,0	20	90	Sq 1/2”	

Vers. 190121

IT

ATTENZIONE: Prima di qualsiasi utilizzo o intervento sull'avvitatore, verificate che le informazioni che seguono e le istruzioni contenute nella guida di sicurezza (Codice articolo: 0MS000) siano state lette, comprese e rispettate. Le caratteristiche e le descrizioni dei nostri prodotti sono soggette a cambiamenti senza preavviso da parte nostra.

DICHIARAZIONE DI UTILIZZO
Avvitatore (classe I) adeguato solamente all'ambiente di natura industriale. Deve essere utilizzato solo per il serraggio. Non è permesso nessun altro utilizzo. Riservato ad un uso professionale.

DATI
Livello di rumore: <70 dB (A)
Livello di vibrazione: <2,5 m/s²

Livello di rumore ed emissione di vibrazioni dichiarati
Questi valori sono misurati da un laboratorio di collaudo in conformità alle norme in vigore, ma in nessun caso possono essere utilizzati per la valutazione dei rischi. I valori risultanti durante l'utilizzo possono essere più elevati dei valori dichiarati. I valori reali di esposizione ed i danni fisici risultanti dall'esposizione alle vibrazioni sono specifici e dipendono dal modo in cui l'utente lavora, dal pezzo lavorato e dalla sua forma, come anche dal tempo di esposizione e dalle capacità fisiche dell'utente. KOLVER non può essere tenuta responsabile dei danni causati dai livelli reali più elevati rispetto a quelli dichiarati, non avendo essa stessa nessun controllo sull'utilizzazione delle macchine.

MODO D'USO
L'avvitatore può essere manuale oppure come mandrino fisso su una macchina.

Uso manuale

- Inserire nell'avvitatore un accessorio di avvitatura appropriato e collegarlo all'unità di controllo.
- Tenere l'avvitatore da l'impugnatura e posizionarlo sul dispositivo di fissaggio da stringere.
- Premere la leva interruttore per avviare l'avvitatore.
- L' avvitatore si ferma quando viene raggiunta la coppia programmata.
- Ogni utilizzo deve essere seguito da un tempo di riposo uguale a tre volte la durata d'utilizzo (1s/3s)
- L'inosservanza di questa istruzione può causare un surriscaldamento del motore o un guasto.
- In questo caso la garanzia non verrà applicata.

Per avviare l'avvitatore, premere sulla leva. Poiché la forza di reazione aumenta proporzionalmente alla coppia di serraggio, accertatevi che l'avvitatore sia in perfetto stato di funzionamento e che l'unità di controllo sia programmata correttamente, per ridurre il rischio di lesioni per l'operatore a seguito di un comportamento imprevisto dell'avvitatore.

Controllo e software
Alimentazione tramite unità di controllo serie EDU2AE secondo il modello di avvitatore.

LUBRIFICAZIONE
Non mettere troppo grasso sugli ingranaggi o sui cuscinetti; basta un leggero strato. Lubrificare dopo 300.000 cicli.

ISTRUZIONI PER LA MANUTENZIONE
La manutenzione deve essere effettuata soltanto da personale qualificato.

- Prima di qualsiasi operazione di manutenzione: scollegare l'avvitatore.
- Durante lo smontaggio-rimontaggio dell'avvitatore, prendere le seguenti precauzioni:
  - Verificare che l'unità di controllo sia spenta.
  - Scollegare il cavo.

Per l'eliminazione dei componenti, dei lubrificanti, etc., accertatevi che siano rispettate le procedure di sicurezza. Conformemente alla Direttiva 2002/96/CE relativa ai rifiuti di apparecchiature elettriche ed elettroniche (WEEE). Questo prodotto deve essere riciclato.

IMPORTANTE: E' sconsigliato l'uso continuo oltre l'80% del campo di coppia!
IMPORTANT: Continuous use over 80% of torque range is not recommend

GARANZIA

1. Questo prodotto è garantito da difetti di lavorazione o di materiali per un periodo massimo di 12 mesi a partire dalla data di acquisto presso KOLVER, sempre che il suo impiego sia stato limitato ad un unico turno per tutto quel periodo. Se il ritmo d'impiego supera il funzionamento di un unico turno, la durata della garanzia sarà ridotta in modo proporzionale.
2. Se il prodotto presenta difetti di fabbricazione o di materiali, durante il periodo della garanzia, deve essere restituito a KOLVER o ai suoi rappresentanti, trasporto prepagato, unitamente ad una breve descrizione del presunto difetto. KOLVER deciderà, a sua discrezione, se dar disposizioni per la riparazione o la sostituzione gratuita dei componenti che ritiene essere difettosi, a causa della fabbricazione o dei materiali.
3. Questa garanzia non è valida per quei prodotti che sono stati usati in modo non-conforme, o modificati, o che non sono stati riparati da KOLVER, o perché sono stati utilizzati ricambi non originali KOLVER, o perché riparati da persone non autorizzate da KOLVER.
4. KOLVER non accetta nessuna richiesta di risarcimento per spese di manodopera o di altro tipo causate da prodotti difettosi.
5. Si escludono espressamente danni diretti, incidentali o indiretti di qualsiasi tipo, dovuti a qualsiasi difetto.
6. Questa garanzia sostituisce ogni altra garanzia o condizione, espressa o implicita, riguardante la qualità, la commerciabilità o l'idoneità a qualsiasi scopo particolare.
7. Nessuno, neppure i rappresentanti, dipendenti o impiegati KOLVER, è autorizzato ad ampliare o modificare, in qualsiasi modo, i termini di questa garanzia limitata. E' comunque possibile estendere la garanzia dietro pagamento di un correspettivo. Ulteriori informazioni contattando kolver@kolver.it

Vers. 190121

EN

WARNING: To reduce the risk of injury, before using or servicing screwdriver, read and understand the following information as well as separately provided safety instructions (item code: 0MS000). The features and descriptions of our products are subject to change without prior notice.

DECLARATION OF USE
Screwdriver (class I) suitable for industrial environment only. It shall be used for tightening. No other use will be permitted. For professional use only.

DATA
Noise level: < 70 dB(A)
Vibration level: < 2.5 m/s²

Declaration of noise and vibration emission
These declared values were obtained by laboratory type testing in compliance with the stated standards and are not adequate for use in risk assessments. Values measured in individual work places may be higher than the declared values. The actual exposure values and risk of harm experienced by an individual user are unique and depend upon the way the user works, the work piece and the workstation design, as well as upon the exposure time and the physical condition of the user. We, KOLVER, cannot be held liable for the consequences of using the declared values, instead of values reflecting the actual exposure, in an individual risk assessment in a work place situation over which we have no control.

OPERATING MODE
The screwdriver can be manual or used as fixed spindle on an automatic machine.

Manual screwdriver
- Fit the screwdriver with a suitable fastening accessory, then connect it to the control unit.
- Hold the screwdriver by the handle and apply to the fastener to be tightened.
- Press the lever to start the screwdriver.
- The screwdriver stops when the preset torque is reached.
- For each second of operation, the motor needs to rest for 3 seconds.
- Failure to do so may result in motor overheating and damage.
- That will be considered as a misuse and the warranty will not be applied.

As the reaction increases in proportion to the tightening torque, make sure that the screwdriver is in perfect working and the control unit is programmed correctly, to reduce the risk of injury to the operator as a result of unexpected behaviour of the screwdriver.

Control and software
Power source by EDU2AE series, depending on the model.

LUBRICATION
Do not grease too much gears or bearings; a thin coat shall be sufficient.
Grease after 300.000 cycles.

MAINTENANCE INSTRUCTIONS
Maintenance should be performed by qualified personnel only.
- Prior to any maintenance task: disconnect the screwdriver.
- When disassembling / reassembling the screwdriver, take the following precautions:
  - Check that the controller is switched off.
  - Disconnect the cable.

According to Directive 2002/96/CE concerning Waste Electrical and Electronic Equipment (WEEE), this product must be recycled.

GUARANTEE
1. This KOLVER product is guaranteed against defective workmanship or materials, for a maximum period of 12 months following the date of purchase from KOLVER, provided that its usage is limited to single shift operation throughout that period. If the usage rate exceeds of single shift operation, the guarantee period shall be reduced on a prorata basis.
2. If, during the guarantee period, the product appears to be defective in workmanship or materials, it should be returned to KOLVER or its distributors, transport prepaied, together with a short description of the alleged defect. KOLVER shall, at its sole discretion, arrange to repair or replace free of charge such items.
3. This guarantee does not cover repair or replacement required as a consequence of products which have been abused, misused or modified, or which have been repaired using not original KOLVER spare parts or by not authorized service personnel.
4. KOLVER accepts no claim for labour or other expenditure made upon defective products.
5. Any direct, incidental or consequential damages whatsoever arising from any defect are expressly excluded.
6. This guarantee replaces all other guarantees, or conditions, expressed or implied, regarding the quality, the marketability or the fitness for any particular purpose.
7. No one, whether an agent, servant or employee of KOLVER, is authorized to add to or modify the terms of this limited guarantee in any way. However it's possible to extend the warranty with an extra cost. Further information at kolver@kolver.it

Vers. 190121

FR

AVERTISSEMENT: Avant toute utilisation ou intervention sur la visseuse, veillez à ce que les informations suivantes ainsi que les instructions fournies dans le guide de sécurité (Code article: 0MS000) aient été lues, comprises et respectées. Les caractéristiques et descriptifs de nos produits sont susceptibles d'évolution sans préavis de notre part.

DECLARATION D'UTILISATION
Visseuse (classe I) appropriée à l'environnement industriel seulement. Elle ne doit être utilisée que pour le serrage ou desserrage des assemblages vissés dans le bois, le métal ou le plastique. Aucune autre utilisation n'est permise. Réservée à un usage professionnel.

DONNÉES
Niveau de bruit : < 70 dB(A)
Niveau de vibration : < 2,5 m/s²

Niveau de bruit et émission de vibrations déclares
Ces valeurs sont mesurées par un laboratoire d'essais conformément aux normes en vigueur, en aucun cas elles ne peuvent être utilisées pour l'évaluation des risques. Les valeurs mesurées en travail peuvent être plus élevées que les valeurs déclarées. Les valeurs réelles d'exposition et les dommages physiques résultant de l'exposition aux vibrations sont spécifiques et dépendent de la façon dont l'utilisateur travaille, de la pièce travaillée et de sa forme, ainsi que du temps d'exposition et des capacités physiques de l'utilisateur. KOLVER ne peut être tenue pour responsable des dommages causés par des niveaux réels plus élevés que les niveaux déclarés, n'ayant elle-même aucun contrôle sur l'utilisation des machines.

MODE D'UTILISATION
La visseuse peut être manuelle ou peut être utilisée comme broche fixe sur une machine.

Visseuse manuelle
- Equiper la visseuse d'un accessoire de vissage approprié puis le relier au secteur par le biais du contrôleur
- Maintenir la visseuse par la poignée et l'appliquer à la fixation à serrer.
- Appuyer sur le levier pour démarrer.
- La visseuse s'arrête lorsque le couple programmé est atteint.
- Chaque utilisation doit être suivie d'un temps de repos égal à trois fois la durée d'utilisation.
- Le non-respect de cette consigne peut provoquer une surchauffe du moteur, voire une panne.
- Ce cas de mauvaise utilisation de la visseuse entraînera la nullité de la garantie.

Comme la force de réaction augmente proportionnellement au couple de serrage, assurez-vous que la visseuse est en parfait état de fonctionnement et que l'unité de commande est correctement programmée, afin d'éviter tout comportement inattendu de la visseuse, susceptible de blesser l'opérateur.

Contrôle et logiciel
Alimentation par boîtier de contrôle série EDU2AE selon le modèle de la visseuse.

LUBRIFICATION
Ne pas mettre trop de graisse sur les engrenages ou paliers; une couche fine suffit. Graisser après 300.000 cycles.

INSTRUCTIONS D'ENTRETIEN
La maintenance doit être assurée par du personnel qualifié uniquement.
- Avant toute opération de maintenance, débrancher la visseuse.
- Lors du démontage remontage de la visseuse, prendre les précautions suivantes:
  - Vérifier que le boîtier de contrôle est hors tension.
  - Déconnecter le câble.

Conformément à la Directive 2002/96/CE relative aux déchets d'équipements électriques et électroniques (WEEE), ce produit doit être recyclé.

GARANTIE KOLVER
1. Ce produit KOLVER est garanti contre les vices de main d'oeuvre ou de fabrication, pendant une période maximum de 12 mois à compter de la date d'achat auprès de KOLVER, dans la mesure où son usage est limité à une seule équipe de travail pendant cette période. Si le taux d'utilisation excède celui d'une seule équipe de travail, la période de garantie sera réduite proportionnellement.
2. Si, pendant la période de garantie, le produit semble présenter des vices de main d'oeuvre ou de fabrication, il doit être renvoyé à KOLVER ou à ses distributeurs, frais de transport payés d'avance, avec une description courte du défaut constaté. KOLVER, à sa seule discrétion, organisera la réparation ou le remplacement gratuit des articles jugés défectueux.
3. Cette garantie sera annulée s'il y a eu abus, mauvaise utilisation ou modification des produits, ou s'ils ont été réparés en utilisant des pièces de rechange autres que celles prescrites par KOLVER ou par une personne autre que KOLVER ou l'un de ses agents agréés.
4. KOLVER n'accepte aucune réclamation en termes de main d'oeuvre ou d'autres dépenses effectuées sur les produits défectueux.
5. Toutes les détériorations directes, accidentelles ou indirectes, quelles qu'elles soient, provenant d'un défaut quelconque, sont expressément exclues.
6. Cette garantie remplace toutes les autres garanties ou conditions, expresses ou implicites, quant à la qualité, la commercialisation ou l'adéquation du produit pour un objectif particulier.
7. Personne, que ce soit un agent, un serviteur ou un employé de KOLVER, n'est autorisé à ajouter ou modifier d'une façon quelconque les termes de cette garantie limitée. Toutefois c'est possible d'étendre la garantie avec un coût supplémentaire. Pour plus d'information, contacter kolver@kolver.it

Vers. 190121

DE

WARNUNG: Werkzeuge erst benutzen, wenn die nachstehenden Hinweise und die Regeln des Sicherheitsleitfaden (Artikel-Nr. 0MS000) gelesen und verstanden wurden. Die Eigenschaften und Beschreibungen unserer Produkte sind der Weiterentwicklung unterworfen und bedürfen keiner vorherigen Benachrichtigung unsererseits.

BESTIMMUNGSGEMÄSSE VERWENDUNG
Das Werkzeug (Klasse I) ist nur für den industriellen Einsatz bestimmt. Es darf ausschließlich zum Anziehen und Lösen von Schraubverbindungen in Holz, Metall oder Kunststoff eingesetzt werden. Jede andere Verwendung ist untersagt. Das Werkzeug ist dem professionellen Einsatz vorbehalten.

DATEN
Geräuschpegel: < 70 dB(A)
Vibrationspegel: < 2,5 m/s²

Deklarierte Geräuschpegel und Vibrationsemissionen
Die deklarierten Werte basieren auf Messungen, die unter Laborbedingungen gemäß den geltenden Normen durchgeführt wurden. Auf keinen Fall können sie zur Risikoabschätzung herangezogen werden. Werte in der individuellen Arbeitsumgebung können höher sein als die angegebenen Werte. Die tatsächlichen Werte und die gesundheitlichen Schäden, die durch die Belastung entstehen können, sind arbeitsplatzbezogen. Sie hängen von der Arbeitsweise des Bedieners, von der Beschaffenheit des bearbeiteten Werkstücks sowie von der Dauer der Belastung und den körperlichen Kapazitäten des Bedieners ab. Die Firma KOLVER haftet nicht für Schäden, die durch höhere Emissionswerte als die angegebenen entstehen, da sie die Anwendung der Maschinen nicht unter Kontrolle hat.

BEDIENUNGSANLEITUNG
Das Werkzeug kann handgeführt sein oder als stationäre Spindel bei einer Station eingesetzt werden.

Handgeführtes Werkzeug

- Das Werkzeug mit einem geeigneten Schraubzubehör ausrüsten und über die Steuerung am Netz anschließen.
- Das Werkzeug am Griff halten und an dem zu verschraubenden Teil anlegen.
- Drücken Sie den Hebel, um das Gerät zu starten.
- Das Gerät schaltet sich aus, sobald das programmierte Drehmoment erreicht ist.
- Nach jeder Benutzung muss das Gerät für die dreifache Zeit der Benutzung ausgeschaltet werden.
- Die Nichteinhaltung dieses Hinweises kann zu einer Überhitzung des Motors oder sogar einer Panne führen.
- Eine unsachgemäße Benutzung des Geräts führt zum Erlöschen der Garantie.

Die Reaktionskraft steigt mit dem Anziehmoment. Deshalb muss sichergestellt sein, dass das Werkzeug einwandfrei funktioniert und dass die Einheit richtig programmieri ist, um unerwartete Reaktionen des Werkzeugs, die den Bediener verletzen können, zu vermeiden.

Steuerung und Software
Stromzufuhr durch EDU2AE Steuerung je nach Gerätemodell.

Wartungsplan
300.000 Verschraubungen Getriebefett prüfen (Überprüfung durch Hersteller empfohlen).

WARTUNGSVORKEHRUNGEN
Wartungseingriffe dürfen nur von qualif ziertem Personal vorgenommen werden.

- Vor Wartungsarbeiten das Werkzeug stets abschalten.
- Bei Demontage und Montage des Werkzeugs sind folgende Vorsichtsmaßregeln zu beachten:
    - Sicherstellen, daß die Steuerung -spannungsfrei ist.
    - Das Kabel abtrennen.

Zur Entsorgung der Komponenten, Betriebsstoffe, etc. die einschlägigen Vorschriften beachten.Gemäß der Richtlinie 2002/96/EG über Elektro- und Elektronik-Altgeräte (WEEE) muss dieses Produkt wiederverwertet werden.

KOLVER GARANTIE

1. Für dieses KOLVER-Produkt leisten wir auf Material- und Fertigungsfehler eine Gewährleistung von maximal 12 Monaten ab dem Datum des Kaufs bei der Firma KOLVER, vorausgesetzt das Produkt wird während dieses Zeitraums ausschließlich im 1-Schicht-Betrieb eingesetzt. Wird das Produkt über den 1-Schicht-Betrieb hinaus eingesetzt, verkürzt sich die Garantiezeit entsprechend.
2. Treten während der Garantiezeit Mängel auf, die durch Material- oder Herstellungsfehler entstanden sein könnten, ist das Produkt mit einer kurzen Beschreibung des festgestellten Mangels an die Firma KOLVER oder ihren Händler zurückzuschicken. Die Firma KOLVER wird die fehlerhaften Teile bei Vorliegen eines Material- oder Herstellungsfehlers nach eigenem Ermessen entweder kostenlos reparieren oder ersetzen. Der Transport muss frei erfolgen – bei Garantiereparaturen erfolgt der Rückversand frei.
3. Die Garantie gilt nicht bei Missbrauch, unsachgemäßer Behandlung oder Veränderungen des Produktes. Weiterhin sind von der Garantie ausgeschlossen Schäden, die auf den Einsatz von anderen als KOLVER-Originalersatzteilen oder die Reparatur durch nicht KOLVER autorisierte Händler zurückzuführen sind.
4. Auf Erstattung durch KOLVER von Arbeitskosten und Aufwand im Zusammenhang mit fehlerhaften Produkten besteht kein Anspruch.
5. Eine Haftung für direkte, indirekte oder zufällige Folgeschäden ist ausdrücklich ausgeschlossen.
6. Die vorliegende Garantie ersetzt alle anderen expliziten oder impliziten Garantien bzw. Bedingungen hinsichtlich Qualität, Handelsfähigkeit oder Eignung des Produktes für einen bestimmten Zweck.
7. Niemand, weder Händler noch Gehilfe oder Mitarbeiter von KOLVER, ist berechtigt, die Bedingungen dieser beschränkten Garantie zu erweitern oder zu verändern. Garnatieverlängerung ist gegen Aufpreis jederzeit möglich. Weitere Informationen finden Sie auch unter kolver@kolver.it.

Vers. 190121

ES

ADVERTENCIA: Antes de utilizar la herramienta o intervenir sobre ella, asegúrense de que la información que figura a continuación, así como las instrucciones que aparecen en la guía de seguridad (Código artículo: 0MS000) han sido leídas, entendidas y respetadas. Las carasterísticas y descripción de nuestros productos están sujetos a la posible evolución sin previo aviso por parte nuestra.

DECLARACIÓN DE USO
Herramienta (clase I) apropiada exclusivamente para un entorno industrial. Sólo debe ser utilizada para el apriete o desapriete de los ensamblajes de madera, metal o plástico. No se autoriza ningún otro uso. Reservado para un uso profesional.

DATOS
Nivel de ruido: < 70 dB(A)
Nivel de vibración: < 2,5 m/s²

Nivel de ruido y emision de vibraciones declarados
Estos valores son proporcionados por un laboratorio de pruebas con la conformidad de la normativa vigente, en ningún caso podrán ser utilizadas para la evaluación de riesgos. Los valores obtenidos al utilizar la herramienta pueden ser superiores a los valores declarados. Los valores reales de exposición así como los daños físicos ocasionados por la exposición a las vibraciones son específicos y dependen de la manera de trabajar del operario, de la pieza trabajada y de su forma, así como del tiempo de exposición y de las capacidades físicas del operario. La responsabilidad de la Sociedad KOLVER no puede verse implicada en los daños causados por niveles reales superiores a los niveles declarados, puesto que no tiene control alguno sobre la utilización de las máquinas.

MODO DE USO
La herramienta puede ser portátil o ser utilizada como husillo fijo en una máquina.

Herramienta portátil
- Equipe la herramienta con un accesorio de apriete adecuado y conéctelo con la red por medio del controlador.
- Sujete la herramienta por la empuñadura y aplíquela en la fijación que quiere apretar.
- Pulse la palanca para arrancar.
- Al alcanzar el par programado la herramienta se detiene.
- Cada utilización ha de ir seguida por una fase de reposo cuya duración será tres veces superior al tiempo de utilización.
- El no respetar dicha consigna puede provocar un sobrecalentamiento del motor e incluso una avería.
- La incorrecta utilización de la herramienta implica a la anulidad de la garantía.

Como la fuerza de reacción va aumentando proporcionalmente al par de apriete, comprueben que la herramienta está en perfecto estado de funcionamiento y la unidad de mando está correctamente programada, para evitar cualquier comportamiento de la herramienta no deseado, que podría herir al operario.

Control y software
Alimentación por controlador EDU2AE en función del modelo de herramienta.

LUBRIFICACIÓN
No poner demasiada grasa en los engranajes o palieres; una fina capa es suficiente cada 300.000 ciclos

INSTRUCCIONES DE MANTENIMIENTO
Las operaciones de mantenimiento las efectuará exclusivamente personal cualificado.
- Antes de cualquier operación de mantenimiento: desconecte la herramienta.
- Al desmontar y volver a montar la herramienta: tome las siguientes precauciones:
  - Compruebe que el cofre está sin tensión.
  - Desconecte el cable.

En conformidad con la Directiva 2002/96/CE referente a los residuos de equipos eléctricos y electrónicos (WEEE), este producto ha de ser reciclado.

GARANTÍA KOLVER
1. Este producto KOLVER se garantiza contra materiales o mano de obra defectuosos, durante un período máximo de 12 meses a partir de la fecha de compra ya sea a KOLVER, siempre que se limite su uso a un solo turno de trabajo durante dicho período. Si el promedio de uso excede el de un turno de trabajo normal, se reducirá proporcionalmente el período de la garantía.
2. Si durante el período de garantía, el producto presenta algún defecto en cuanto a materiales o mano de obra, deberá ser devuelto a KOLVER o a cualquiera de sus agentes, junto con una breve descripción del defecto. A su sola discreción, KOLVER podrá decidir reparar o sustituir gratuitamente aquellos elementos que considere necesarios. (Los portes serán siempre a cargo del cliente.)
3. La presente garantía no se aplica en caso de abuso, mal uso, modificación, o reparación con repuestos que no sean originales KOLVER, o si han sido reperados por personal ajeno a KOLVER o cualquiera de sus agentes autorizados.
4. KOLVER no acepta reclamación alguna en concepto de mano de obra u otros gastos efectuados en productos defectuosos.
5. Todos aquellos daños directos, accidentales o indirectos, sea cual sea su naturaleza, que resultasen de cualquier defecto serán expresamente excluidos.
6. Esta garantía sustituye a cualquier otra garantía, o condiciones, expresas o implícitas, referente a calidad, comercialización o adecuación del producto para un determinado objetivo.
7. Nadie, ya sea un agente, prestatario o empleado de KOLVER, está autorizado a añadir o modificar los términos de la presente garantía limitada. Sin embargo, es posible extender la garantía con un costo adicional. Más información en kolver@kolver.it.

Vers. 190121

PT

AVISO: Antes de utilizar ou intervir na ferramenta, leia atentamente e respeite as informações seguintes assim como as instruções fornecidas no manual de segurança (Código artigo: 0MS000). As características e descrições dos nossos produtos estão sujeitas a alterações sem aviso prévio.

DECLARAÇÃO DE UTILIZAÇÃO
Ferramenta adequada unicamente para ambiente industrial. Deve ser utilizada apenas para o aperto ou desaperto de montagens em madeira, metal ou plástico. Não é permitida qualquer outra utilização. Reservada para uso profissional.

DADOS
Nível de ruído: < 70 dB(A)
Nível de vibração: < 2,5 m/s²

Declaração de nível de ruído e emissão de vibrações
Estes valores são medidos por um laboratório de ensaios em conformidade com as normas em vigor, e não devem ser utilizados em caso algum para avaliação dos riscos. Os valores medidos em trabalho podem ser mais elevados que os valores declarados. Os valores reais de exposição e os danos físicos resultantes da exposição às vibrações são específicos e dependem do modo como trabalha o operador, da peça trabalhada e sua forma, assim como do tempo de exposição e das capacidades físicas do utilizador. A Empresa KOLVER não pode ser considerada responsável pelos danos causados pelos níveis reais mais altos que os níveis declarados, pois não tem qualquer controle sobre a utilização das máquinas.

MODO DE UTILIZAÇÃO
A ferramenta pode ser portátil ou pode ser utilizada com o fuso fixo numa máquina.

Ferramenta portátil
- Equipar a ferramenta com um acessório de aperto adequado e ligá-la na rede por intermédio do controlador.
- Manter a ferramenta pelo punho e possicioná-la na fixação a ser apertada. Pressionar a alavanca para dar a partida.
- A ferramenta pára quando o torque programado for atingido. Cada utilização deve ser seguida de um tempo de repouso igual a três vezes o tempo de utilização.
- O descumprimento desta recomendação pode provocar o superaquecimento do motor, e mesmo uma avaria.
- Nesse caso de má utilização da ferramenta será motivo de nulidade da garantia.

Em modo alavanca, pressionar a alavanca para dar a partida na ferramenta. Como a força de reação aumenta proporcionalmente ao torque de aperto, verificar se a ferramenta está em perfeito estado de funcionamento e se a unidade de comando está programada corretamente, de modo a evitar qualquer comportamento inesperado da ferramenta, susceptível de causar ferimentos no operador.

Controle e software
Alimentação pelo controlador EDU2AE consoante o modelo da ferramenta.

LUBRIFICAÇÃO
Não aplicar demasiada graxa nas engrenagens ou mancais; basta uma camada fina. Engraxar após 300 000 ciclos.

INSTRUÇÕES DE MANUTENÇÃO
A manutenção deve ser efetuada unicamente por pessoal qualificado.
- Antes de qualquer operação de manutenção: desligar a ferramenta da energia
- Ao desmontar e montar a ferramenta, tomar as precauções seguintes:
  - Verificar se o controlador está sem tensão.
  - Desligar o cabo.

Para a eliminação dos componentes, lubrificantes, etc., certificar-se que os processos de segurança são respeitados. Em conformidade com a Diretiva 2002/96/CE referente aos resíduos de equipamentos elétricos e eletrônicos (WEEE).

GARANTIA KOLVER
1. Este produto KOLVER está garantido contra defeito de fabricação ou dos seus componentes, pelo prazo máximo de 12 meses a contar da data da compra feita à KOLVER, com a condição de que a utilização do produto esteja limitado ao funcionamento em turno único durante o referido período. Caso a utilização tenha ultrapassado os limites do funcionamento em turno único, o prazo de garantia será reduzido proporcionalmente.
2. Caso o produto apresente sinais de defeito de fabricação ou nos seus componentes durante o período de garantia, deverá ser devolvido à KOLVER ou aos seus agentes, juntamente com uma breve descrição da suposta falha. Ficará a critério exclusivo da KOLVER, a decisão de providenciar o seu conserto ou, de realizar a substituição gratuita, dos produtos ou componentes considerados defeituosos, sendo o transporte e o custo do frete a cargo do usuário.
3. A presente garantia não se aplicará a produtos que tenham sido utilizados de forma incorreta; ou que tenham sofrido modificações e/ou reparações com peças de reposição não originais KOLVER, ou ainda realizados por pessoal técnico não pertencente ao fabricante KOLVER ou a agentes e/ou serviços técnicos autorizados pela mesma.
4. Caso a KOLVER incorra em alguma despesa na reparação de uma falha resultante de abuso, utilização incorreta, dano acidental ou modificação não autorizada, tal despesa deverá ser integralmente reembolsada.
5. A KOLVER não aceita qualquer reivindicação pertinente à mão-de-obra ou despesa de outra natureza, respeito a produtos defeituosos. Quaisquer danos diretos, acidentais ou resultantes do ato, que decorram de qualquer falha, estão expressamente excluídos.
6. A presente garantia substitui a todas as demais garantias, ou condições expressas ou implícitas, pertinentes à qualidade, ou adequação do produto a qualquer finalidade específica.
7. Nenhuma pessoa, seja agente, empregado ou funcionário da KOLVER, está autorizada a fazer aditamentos e/ou modificar, os termos desta garantia limitada, seja de que forma for. Mesmo assim, é possível estender o prazo de garantia com um custo extra. Para maiores informações entrar em conto com: kolver@kolver.it

Vers. 190121

FI

VAROITUS: Lue huolellisesti seuraavat ohjeet samoin kuin turvallisuusohjeet (Tuotekoodi: 0MS000) ennen työkalun käyttöönottoa. Tämän laitteen ominaisuudet ja selostus voivat muuttua ilman erillistä huomautusta.

KÄYTTÖOHJE
Ainoastaan teollisuusolosuhteisiin tarkoitettu työkalu (luokka I). Käytetään puisten, metallisten tai muovisten liitosten kiristämiseen tai irrottamiseen. Muunlainen käyttö ei ole sallittua. Ainoastaan ammattikäyttöön.

TIEDOT
Melutaso: < 70 dB(A)
Tärinätaso: < 2.5 m/s²

Melu- ja tärinäpäästöt
Edellä ilmoitetut arvot on saatu laboratoriotyyppisten testien avulla, ilmoitettujen vaatimusten mukaisesti, eivätkä ne sovellu riskienarviointikäyttöön. Yksittäisissä työpaikoissa mitatut arvot saattavat olla korkeampia kuin ilmoitetut arvot. Todelliset altistumisarvot ja yksittäiselle käyttäjälle aiheutuva vahinkoriski ovat tapauskohtaisia ja riippuvat käyttäjän työskentelytavasta, työkohteesta ja työaseman suunnittelusta sekä altistumisajasta ja käyttäjän fyysisestä kunnosta. KOLVERia ei voida asettaa vastuuseen mainittujen arvojen käyttöön liittyvistä seurauksista. Sen sijaan on otettava huomioon todellisesta altistumisesta johtuvat arvot yksittäisessä riskienarvioinnissa työpaikkatilanteessa, jota emme voi kontrolloida.

KÄYTTÖOHJE
Työkalu voi olla kannettava tai sitä voidaan käyttää kiinteänä pistikkeenä koneella.

Kannettava työkalu
- Varusta työkalu sopivalla ruuvilisävarusteella ja liitä se sitten verkkovirtaan ohjaimen kautta.
- Pidä työkalua kahvasta ja aseta se ruuvikiinnittimelle.
- Työkalu käynnistetään painamalla vipua.
- Työkalu pysähtyy kun ohjelmoitu momentti on saavutettu.
- Moottorin täytyy levätä jokaista käyttösekuntia kohti 3 sekuntia.
- Tämän ohjeen noudattamatta jättäminen voi aiheuttaa moottorin ylikuumenemisen tai sen vahingoittamisen.
- Se luokitellaan väärinkäytöksi, joka ei ole takuunalainen.

Työkalun reagointiteho kasvaa suhteessa kiristysvääntömomenttiin, joten on varmistettava, että työkalu on moitteettomassa käyttökunnossa sekä ohjausyksikkö oikein ohjelmoitu. Näin vältetään käyttäjän loukkaantuminen, joka johtuu työkalun arvaamattomasta toiminnasta.

Ohjaus ja ohjelmisto
Virtalähteet EDU2AE mallista riippuen.

VOITELU
Älä laita liikaa rasvaa välityksille tai tukilaakereille; yksi rasvakerros riittää. Käytä vain minimimäärä rasvaa komponenttien kohdistamiseksi kokoonpanon yhteydessä.
Kun 300000 sykliä.

HUOLTO-OHJEET
Huollon saa tehdä vain koulutettu ammattihenkilökunta.
- Ennen huoltotöitä: irroita työkalu verkkovirrasta
- Työkalun purkamisen/kokoonpanon yhteydessä: noudata seuraavia varokeinoja:
  - Varmista, että kotelo on jännitteetön.
  - Irroita kaapeli.

Komponenttien, jäteöljyjen jne. hävittämisessä on noudatettava turvallisuusmääräysten mukaista käytäntöä.
Sähkölaite- ja elektroniikkajätettä koskevan direktiivin 2002/96/CE nojalla tämä tuote täytyy kierrättää.

KOLVER-YHTIÖN MYÖNTÄMÄ TAKUU
1. Tällä KOLVER-tuotteella on takuu, joka kattaa mahdolliset valmistusvaiheessa aiheutuneet tuote- tai materiaaliviat enintään 12 kuukauden ajalle siitä päivämäärästä lähtien, jolloin tuote on hankittu KOLVER-yhtiöltä edellyttäen, että tuotteen käyttö rajoitetaan yhteen työvuoroon tämän ajanjakson aikana. Jos tuotetta käytetään enemmän kuin yhden työvuoron ajan, takuun kattama jakso lyhentyy tuotteen käyttöä vastaavalla ajalla.
2. Jos tuotteessa ilmenee takuujakson aikana valmistusvaiheessa aiheutunutta tai materiaaleista johtuvaa vikaa, se on palautettava KOLVER-yhtiölle tai sen myyntiedustajalle ja mukaan on liitettävä lyhyt, kyseistä vikaa koskeva kuvaus. KOLVER järjestää harkintansa mukaan maksutta korjauksen tai vaihdon sellaisille tuotteille, joissa todetaan valmistusvaiheessa syntynyt tai materiaalien aiheuttama vika.
3. Takuu ei kata tuotteita, joita on käytetty asiattomasti tai väärin tai joihin on tehty muutoksia. Se ei myöskään kata tuotteita, joita on korjattu muita kuin alkuperäisiä KOLVER-yhtiön varaosia käyttämällä tai joiden korjauksen on suorittanut joku muu kuin KOLVER-yhtiö tai sen valtuuttama huoltohenkilöstö.
4. KOLVER ei ota vastattavakseen minkäänlaisia viallisista tuotteista aiheutuneita työkuluja tai muita korvausvaatimuksia.
5. Takuu ei kata minkäänlaisia vikojen mahdollisesti aiheuttamia suoranaisia, satunnaisia tai käyttöön vaikuttavia kustannuksia.
6. Tämä takuu annetaan kaikkien muiden suorien tai epäsuorien takuiden tai ehtojen asemasta koskien tuotteen laatua, myyntikelpoisuutta tai sopivuutta tiettyyn käyttötarkoitukseen.
7. KOLVER-yhtiön myyntiedustajilla, palveluhenkilöstöllä tai työntekijöillä ei ole valtuuksia tehdä minkäänlaisia lisäyksiä tai muutoksia tämän takuun rajoittamiin ehtoihin.

Vers. 190121

SE

VARNING: Läs noga igenom dessa säkerhetsinstruktioner liksom anvisningarna i säkerhetsguiden (Artikelkod: 0MS000) innan du börjar använda verktyget. Egenskaperna hos och beskrivningen av våra produkter kan undergå förändringar utan föregående meddelande från vår sida.

BRUKSANVISNING
Verktyg (klass I) endast lämpad för industriell miljö. Skall användas för att skruva åt eller lossa fogningar i trä-, metall- eller plastmaterial. All annan användning är förbjuden. Enbart för professionellt bruk.

FAKTA
Ljudnivå: < 70 dB(A)
Vibrationsnivå: < 2.5 m/s²

Förklaring av ljud- och vibrationsemission
Dessa uppgivna värden har uppnåtts genom Laboratorietester i enlighet med de angivna normerna och bör inte användas för riskbedömning. Värden som mäts på enskilda arbetsplatser kan vara högre än de angivna värdena ovan. De faktiska exponeringsvärdena och de skaderisker som varje enskild individ upplever, är unika för dem och beroende av hur användaren arbetar, arbetssektion och arbetsplatsens utseende, liksom av exponeringstiden och av användarens fysiska tillstånd. Vi, KOLVER, kan inte hållas ansvariga för eventuella konsekvenser vid användning av de angivna värdena, istället för de värden som motsvarar den faktiska exponeringen, för varje enskild riskbedömningssituation på en arbetsplats som vi inte har någon kontroll över.

ANVÄNDNINGSSÄTT
Verktyget kan vara mobilt eller användas som fast spindel på en maskin.

Mobilt verktyg
- Utrusta verktyget med ett lämpligt skruvdragningstillbehör och anslut det sedan till nätet via styrenheten.
- Håll verktyget i handtaget och anbringa det på det förband som skall dras åt.
- Tryck på spaken för att starta verktyget.
- Verktyget stannar när det förinställda åtdragningsmomentet uppnås.
- Motorn behöver vila i 3 sekunder för varje sekund den används.
- Om motorn inte får vila kan den överhettas och så småningom förstöras.
- Detta anses vara felaktig användning och garantin gäller då inte.

Eftersom reaktionskraften ökar proportionellt mot åtdragningsmomentet, se till att verktyget är i perfekt funktionsskick och att manöverenheten är riktigt programmerad, för att undvika varje oväntat beteende hos verktyget, som riskerar att skada operatören.

Kontroll och programvara
Strömförsörjning via EDU2AE beroende på maskin modell.

SMÖRJNING
Använd inte för mycket fett på kugghjul och lager; ett tunt skikt räcker, smörjningsintervall 300 000 cycler.

UNDERHÅLLSINSTRUKTIONER
Underhållet får endast utföras av kvalif cerad personal.
- Före varje underhållsarbete: koppla ur verktyget.
- Vid demontering och återmontering av verktyget, vidta följande försiktighetsåtgärder:
  - Kontrollera att instrumentet är bortkopplat -från nätet.
  - Dra ur sladden.

För omhändertagandet av komponenter, smörjmedel, etc…se till att säkerhetsprocedurerna tillämpas. enlighet med direktiven 2002/96/CE angående bortförskaffning av elektriska och elektronisk utrustning (WEEE), måste den här produkten återvinnas.

KOLVER GARANTI
1. Denna produkt från KOLVER garanteras mot defekt utförande eller material under en period av högst 12 månader efter det datum den köptes från KOLVER förutsatt att dess användning är begränsad till enkelskiftarbete under hela denna period. Om användningsfrekvensen överskrider enkelskiftarbete skall garantiperioden reduceras i motsvarande mån.
2. Om produkten under garantiperioden visar sig vara defekt beträffande utförande eller material, skall den återlämnas till KOLVER eller dess ombud tillsammans med en kortfattad beskrivning av den påstådda defekten. KOLVER skall efter eget gottfinnande ordna med reparation eller utbyte av sådana komponenter som anses felaktiga på grund av defekt utförande eller material.
3. Denna garanti upphör att gälla för produkter som misshandlats, missbrukats eller modif erats, eller som har reparerats med andra reservdelar än originaldelar från KOLVER eller av någon annan än KOLVER eller dess auktoriserade serviceombud.
4. Om KOLVER skulle ådraga sig någon utgift vid åtgärdandet av en defekt som orsakats av misshandel, missbruk, ofrivillig skada eller icke auktoriserad modifiering kräver de att denna utgift till fullo betalas.
5. KOLVER accepterar inga krav om ersättning för arbetskostnader eller andra omkostnader för defekta produkter.
6. Alla direkta eller tillfälliga skador eller följdskador som uppkommer på grund av någon defekt undantages uttryckligen.
7. Denna garanti lämnas i stället för alla andra garantier, eller villkor, uttryckliga eller underförstådda, beträffande kvalitet, säljbarhet eller lämplighet för något bestämt ändamål.

Vers. 190121

DK

ADVARSEL: Læs dette omhyggeligt, forstå og overhold disse instruktioner samt sikkerhedsforskrifter (Varenummer: 0MS000), inden værktøjet tages i brug eller repareres. Vi forbeholder os ret til uden varsel, at ændre egenskaberne for og beskrivelserne af vore produkter.

ANVENDELSE:
Værktøjet (klasse I) er kun egnet til industrielt miljø. Bør kun anvendes til spænding og løsning af samlinger i træ, metal eller plastikmaterialer. Ingen anden anvendelse er tilladt. Kun til professionel brug.

DATA:
Støjniveau: < 70 dB(A)
Vibrationsniveau: < 2.5 m/s²

Specifikation af støj- og vibrationsudledning:
Disse specificerede værdier er opnået ved laboratorieprøver under overholdelse af gældende standarder og er ikke dækkende for risikovurderinger. Værdier målt i aktuelle arbejdsmiljøer kan være højere end de angivne værdier. De faktiske eksponeringsværdier og risici for skader, der opleves af individuelle brugere, er unikke og afhænger af brugerens arbejdsform, arbejdsobjektet og arbejdspladsens udformning, såvel som eksponeringstid og brugerens fysiske tilstand. Vi, KOLVER, kan ikke drages til ansvar for konsekvenserne af anvendelse af de specificerede data, i stedet for værdier der afspejler den faktiske eksponering, i en individuel risikovurdering på en arbejdsplads vi ikke har kontrol over.

BRUGSANVISNING:
Værktøjet kan være bærbart eller anvendes som fast dorn på en maskine.

Bærbart værktøj
- Udstyr værktøjet med et passende skruetilbehør og koble det til netspændingen gennem kontrolboksen.
- Hold værktøjet i håndtaget, og sæt det på den fastspænding, der skal spændes.
- Tryk armen ned, for at starte.
- Værktøjet stopper, når det forudindstillede moment nås.
- Efter hver anvendelse har motoren brug for at hvile i et tidsrum, der er lig med 3 gange driftstiden.
- Hvis dette ikke overholdes, kan det føre til overophedning og muligvis beskadigelse af motoren.
- Dette betragtes som et tilfælde af misbrug, der ophæver garantien.

Da reaktionskraften stiger proportionalt med tilspændingsmomentet, skal man sikre sig, at værktøjet er i perfekt funktionsstand og at styreenheden er korrekt programmeret for at undgå, at værktøjet opfører sig uventet med risiko for at skade operatøren.

Styring og software:
Strømforsyning via kontrolboksen EDU2AE afhængigt af modellen.

SMØRING:
Gear eller lejer må ikke få for meget fedt, et tyndt lag er tilstrækkelig. Fedt gives efter 300,000 cyklusser.

VEDLIGEHOLDELSESINSTRUKTIONER:
Vedligeholdelse skal udelukkende sikres af kvalificeret personale.
- Før nogen form for vedligeholdelse: Frakobl værktøjet.
- Ved afmontering genmontering af værktøjet: Træf følgende foranstaltninger
  - Kontroller at boksen ikke er -spændingsførende.
  - Frakobel kablet.

Ved bortskaffelse af komponenter, smøremidler, osv. skal man sikre sig, at sikkerhedsreglerne er overholdt. I overensstemmelse med WEEE-direktivet (2002/96/EF) om affald af elektrisk og elektronisk udstyr, skal dette produkt recirkuleres.

KOLVER GARANTI:
1. Dette KOLVER produkt er garanteret mod defekt udførelse eller materiale for en periode på maksimalt 12 måneder efter den dato, det blev indkøbt fra KOLVER, forudsat dets brug begrænses til enkeltholdsdrift under hele denne periode. Hvis brugen overstiger enkeltholdsdriftniveau, vil garantiperioden blive reduceret på pro rata basis.
2. Hvis produktet forekommer at være defekt med hensyn til udførelse eller materiale indenfor garantiperioden, skal det returneres til KOLVER, eller dennes agenter, sammen med en kort beskrivelse af den anførte defekt. KOLVER vil efter eget skøn arrangere enten reparation eller udskiftning af sådanne dele, som anses for defekte, enten på grund af defekt udførelse eller materialer. Transport skal forudbetales.
3. Denne garanti vil ophøre med at være gældende for produkter, som er blevet misbrugt, brugt forkert eller modificeret, eller er blevet repareret med reservedele, som ikke er originale KOLVER reservedele eller af andre end KOLVER, eller dennes autoriserede service-agenter.
4. KOLVER accepterer ikke noget krav for arbejdsløn eller andre udgifter i forbindelse med defekte produkter.
5. Alle direkte, tilfældige eller deraf følgende skader, som stammer fra nogen som helst defekter, er udtrykkeligt udelukket.
6. Denne garanti gives i stedet for alle andre garantier, eller betingelser, udtrykkelige eller underforståede, med hensyn til kvaliteten, salgbarheden eller egnetheden for noget som helst specielt formål.
7. Ingen, hvorvidt en agent, ansat eller ansat hos KOLVER, er bemyndiget til at tilføje eller ændre betingelserne i denne begrænsede garanti på nogen måde. Men det er muligt at forlænge garantien med en ekstra omkostning. Yderligere oplysninger kolver@kolver.it.

Vers. 190121

NL

WAARSCHUWING: Voor gebruik of demontage van het gereedschap altijd eerst zekerstellen dat de navolgende informatie evenals de geleverde veiligheidsinstructies (Code artikel: 0MS000) gelezen, begrepen en in acht genomen zijn. De eigenschappen en omschrijvingen van onze producten kunnen zonder voorafgaande kennisgeving onzerzijds wijzigingen ondergaan.

GEBRUIKSVERKLARING
Dit gereedschap (klasse I) is alleen geschikt voor de industriële werkomgeving. Het dient uitsluitend te worden gebruikt voor het schroeven en losschroeven van assemblages vastgeschroefd in hout, metaal of plastic. Geen enkele andere toepassing is toegelaten. Uitsluitend bestemd voor professioneel gebruik.

GEGEVENS
Geluidsniveau: < 70 dB(A)
Vibratieniveau: < 2,5 m/s²

Aangegeven geluidsniveau en vibratie afgifte
Deze waarden worden door een proef laboratorium overeenkomstig de geldende normen gemeten, in geen geval kunnen deze worden gebruikt voor het evalueren van risico's. De tijdens de werking gemeten waarden kunnen hoger zijn dan de aangegeven waarden. De werkelijke waarden van blootstelling en fysieke schade veroorzaakt door de blootstelling aan vibraties zijn specifiek en afhankelijk van de werkwijze van de gebruiker, van het werkstuk, de vorm ervan, van de duur van de blootstelling en van de fysieke gesteldheid van de gebruiker. De firma KOLVER kan niet aansprakelijk worden gesteld voor schade veroorzaakt door waarden die in de werkelijkheid hoger zijn dan de aangegeven waarden, aangezien zij absoluut geen controle heeft op het gebruik van de machines.

GEBRUIKSAANWIJZING
Het gereedschap kan worden gebruikt als draagbaar apparaat of als vaste schroevendraaier op een machine.

Draagbaar apparaat
- Het gereedschap voorzien van de geschikte schroefaccessoire en het vervolgens aansluiten op de netspanning via de besturing.
- Het gereedschap aan de handgreep vasthouden en op de opgespannen schroefbevestiging plaatsen.
- Druk op de bedieningsknop om te starten.
- Het apparaat stopt zodra het ingestelde draaimoment is bereikt .
- Na elk gebruik moet er een pauze ingelast worden gelijk aan drie keer de inschakelduur.
- Het niet in acht nemen van deze instructie kan oververhitting en zelfs storing van de motor veroorzaken.
- Bij dergelijk onjuist gebruik van het apparaat is de garantie niet van toepassing.

Aangezien de reactiekracht van de schroefmachine afhankelijk van het ingestelde aandraaimoment, moet men zich ervan verzekeren dat het gereedschap goed functioneert en dat de besturing juist geprogrammeerd is ter voorkoming van onverwachte reacties van het gereedschap, die tot letsel van het bedienend personeel kunnen leiden.

Controle en software
Voeding via EDU2AE afhankelijk van het type apparaat.

SMEERBEURT
Niet te veel smeerolie aanbrengen op de overbrenging en de lagers, een dun laagje is voldoende. Smeren wordt aangeraden na 300.000 schroefbewerkingen

ONDERHOUDSINSTRUCTIES
Het onderhoud moet uitsluitend door vakbekwaam personeel worden uitgevoerd.
- Voor alle onderhoudshandelingen allereerst: het gereedschap loskoppelen van de netspanning
- Bij het demonteren en monteren van het gereedschap: de volgende voorzorgsmaatregelen nemen:
  - Zeker stellen dat de besturing niet onder spanning staat.
  - De kabel loskoppelen.

Voor verwijdering van onderdelen, smeerolie, enz. allereerst zekerstellen dat de veiligheidsvoorschriften opgevolgd zijn. Overeenkomstig Richtlijn nr. 2002/96/EG omtrent afval van elektrische en elektronische apparatuur (WEEE of AEEA) komt dit product voor recycling in aanmerking.

GARANTIEVOORWAARDEN
1. Dit KOLVER product is gegarandeerd voor een periode van maximaal 12 maanden tegen materiaal- en/of constructiefouten, op voorwaarde dat het gedurende die tijd in een één ploegendienst is gebruikt. Mocht in een meerploegendienst worden gewerkt, dan wordt de garantieperiode dienovereenkomstig aangepast.
2. Indien het KOLVER product gedurende de garantieperiode gebreken vertoont ten gevolge van een materiaal- en/of constructiefout, dient het binnen de garantietermijn met een korte beschrijving van het defect te worden geretourneerd aan KOLVER of één van haar agenten. KOLVER zal zorg dragen voor de reparatie of vervanging van de artikelen die gebreken vertonen ten gevolge van een materiaal- en/of constructiefout.
3. De garantie komt te vervallen indien de KOLVER producten foutief gebruikt worden, aangepast zijn, of indien ze gerepareerd zijn met andere onderdelen dan die worden voorgeschreven door KOLVER of niet door KOLVER of een door KOLVER erkende reparateur zijn geleverd.
4. KOLVER is niet aansprakelijk voor kosten die voorvloeien uit het gebrekkig functioneren van haar producten.
5. Alle eventuele directe, incidentele of indirecte kosten, in welke vorm dan ook, als gevolg van enig gebrek, zijn nadrukkelijk uitgesloten.
6. Deze garantievoorwaarden vervangen alle voorgaande voorwarden met betrekking tot de kwaliteit, verkoop of geschiktheid van het product voor enig bepaald doel.
7. Geen enkel persoon, met inbegrip van agenten en werknemers van KOLVER, heeft het recht om iets aan deze garantievoorwaarden toe te voegen of aan te passen.

Vers. 190121

HU

VIGYÁZAT: A szerszám használata vagy bármilyen más beavatkozás előtt a felhasználónak el kell olvasnia, meg kell értenie és a használat vagy beavatkozás során be kell tartania a következő, valamint a biztonsági útmutatóban (cikkszám: 0MS000) szereplő utasításokat. A termék adatai és a leírásban szereplő jellemzői a fejlesztés eredményeképpen külön értesítés nélkül változhatnak.

ALKALMAZÁSRA VONATKOZÓ NYILATKOZAT
A szerszám (I. osztály) csak ipari környezetben történő használatra alkalmas. Kizárólag fába, fémbe vagy műanyagba behajtott csavarok segítségével összeállított szerkezetek össze- illetve szétszerelésére használható.Bármilyen más célra történő alkalmazása tilos. Kizárólag professzionális használatra.

ADATOK
Zajszint: < 70 dB(A)
Vibrációs szint: < 2,5 m/s²

Zajszintre és a vibrációs szintre vonatkozó nyilatkozat
A megadott értékeket az érvényben lévő szabványoknak megfelelően, vizsgálati laboratóriumban mérték. Az adatok semmiképpen nem használhatók a kockázatok értékelésére. Előfordulhat, hogy a használat közben mért értékek a deklarált értékeket meghaladják. A valóságban fellépő értékek és a vibráció hatására fellépő károsodások a dolgozó munkavégzési módjától, a munkadarabtól és annak formájától valamint a munkavégzés időtartamától és a munkavégző f zikai adottságaitól függően egyéniek. A KOLVER az itt megadott értékeket meghaladó értékekből eredő károsodásokért semmilyen felelősséget nem vállal, mivel a gépek alkalmazása fölött semmilyen ellenőrzést nem tud gyakorolni.

ALKALMAZÁSI MÓD
A szerszám használható kéziszerszámként, és használható egy szerszám rögzített forgórészeként.

Kéziszerszámként

- Szerelje fel a szerszámot a megfelelő behajtó tartozékkal, majd a vezérlő segítségével csatlakoztassa a tápfeszültséghez.
- Tartsa a szerszámot a fogantyúnál fogva, és alkalmazza a kívánt rögzítési művelethez.
- A szerszám elindításához nyomja meg az indítókart.
- Az előre beállított nyomatékérték elérésével a szerszám leáll.
- Minden másodperc üzemidőért a motor három másodpercnyi pihenőt igényel.
- Ha ezt nem tartja be, a motor túlmelegedhet, és végső fokon károsodhat is.
- Ez nem megfelelő használatnak minősül és a garancia érvénytelenné válik.

Mivel az ellenerő a behajtási nyomatékkal arányosan növekszik, győződjön meg arról, hogy a szerszám tökéletes állapotban van-e, és a vezérlőegység helyesen van-e beprogramozva, nehogy a szerszám váratlan viselkedése sérülést okozzon.

Vezérlés és szoftver
Üzemeltetés EDU2AE típusú áramforrásokról, a modell függvényében.

KENÉS
Nem szabad a hajtást vagy a csapágyazást túlzsírozni, egy vékony réteg is elég. Zsírzás 300 000 fordulatonként.

KARBANTARTÁSI UTASÍTÁSOK
A karbantartást csak szakképzett személy végezheti.

- A szerszám tápfeszültség vezetékét minden karbantartási művelet előtt húzza ki a hálózati csatlakozóból.
- A szerszám szét- és összeszerelése során tartsa be a következő óvintézkedéseket:
  - Ellenőrizze, hogy a vezérlő egység ki van- -e kapcsolva,
  - Húzza ki a kábelt.

Alkatrészek, kenőanyagok eltávolítása előtt ellenőrizni kell a biztonsági előírások betartását. Az elektromos és elektronikus termékek hulladékairól (WEEE) szóló 2002/96/EK irányelv értelmében a terméket újra kell hasznosítani.

KOLVER GARANCIA

1. E KOLVER termékre való megvásárlás napját követő maximum 12 hónapra van garancia hibás szerelés vagy anyaghiba esetére, feltéve, hogy a használata ezen időszak alatt egyműszakos üzemeltetésre korlátozódik. Ha a használat mértéke meghaladja az egyműszakos üzemeltetést, a garanciális időszak arányosan csökken.
2. Ha a garanciális időszak alatt a termék meghibásodik hibás szerelés vagy anyaghiba miatt, vissza kell küldeni a KOLVER-nek vagy ügynökeinek, az állítólagos hiba rövid leírásával együtt. A KOLVER, saját belátása szerint, díjmentesen intézkedik az ilyen, hibás szerelés vagy anyaghiba miatt meghibásodott tételek javításáról vagy cseréjéről.
3. E garancia érvénytelenné válik az olyan termékek esetében, amelyeket nem előírásszerűen, nem rendeltetésszerűen használtak vagy módosítottak, vagy amelyeket nem eredeti KOLVER pótalkatrészekkel vagy a KOLVER étől eltérő pótalkatrészekkel vagy nem az általa engedélyezett szervizben javítottak.
4. A KOLVER nem fogad el semmilyen igényt a hibás termékekkel kapcsolatos munkaerő- és más költségek tekintetében.
5. Bármiféle hibából eredő bármilyen közvetlen, eseti vagy következményes kár kifejezetten ki van zárva.
6. E garancia a minőséget, a forgalomképességet vagy bármilyen adott célra való alkalmasságot tekintve minden egyéb, kifejezett vagy beleértett garanciát vagy feltételt helyettesít.
7. Senki, a KOLVER semmilyen ügynöke, megbízottja vagy alkalmazottja sem jogosult semmilyen módon megváltoztatni vagy módosítani e korlátozott garancia feltételeit.

Vers. 190121

PL

OSTRZEŻENIE: Przed podjęciem użytkowania przyrządu czy jakichkolwiek działań z nim związanych – należy upewnić się, że instrukcje dostarczone razem z podręcznikiem d/s bezpieczeństwa (Kod urządzenia: 0MS000) zostały przeczytane, zrozumiane i będą przestrzegane. Charakterystyki i opisy naszych wyrobów mogą podlegać zmianom – bez uprzedniego powiadamiania o tym z naszej strony.

DEKLARACJA UŻYTKOWANIA
Przyrząd (klasa I) dostosowany jest tylko do warunków środowiska przemysłowego. Stosowany może być tylko do dokręcania lub odkręcania śrub czy wkrętów na elementach łączonych z drewna, metalu lub tworzyw sztucznych. Służy tylko do użytku zawodowego. Niedozwolone jest jakiekolwiek inne użytkowanie przyrządu.

DANE TECHNICZNE
Poziom hałasu: < 70 dB(A)
Poziom wibracji: < 2,5 m/s²

Deklarowany poziom hałasu i emisji wibracji
Pomiaru tych wartości dokonuje odpowiednie laboratorium, zgodnie z obowiązującymi normami. Jednakże w żadnym przypadku dane te nie mogą być stosowane do określania stopnia ryzyka. Wartości poziomów pomierzone podczas wykonywanej pracy mogą być wyższe od wartości deklarowanych. Rzeczywiste poziomy emisji wibracji, na które narażony jest operator jak i ewentualne szkody f zyczne, są czymś indywidualnym. Wynikają ze sposobu pracy operatora, zależą też od rodzaju elementu na którym pracuje i od kształtu tego elementu, od czasu ekspozycji operatora na wibrację oraz od warunków f zycznych samego operatora. Firma KOLVER nie może ponosić odpowiedzialności za szkody wynikajace z wyższych wartości poziomów hałasu i wibracji niż poziomy zadeklarowane. Wynika to z tego, że f rma nie ma żadnej możliwości kontroli nad sposobem użytkowania przyrządów.

SPOSÓB UŻYTKOWANIA
Wkrętarka może być używana jako narzędzie ręczne lub zamontowana w maszynie.

Narzędzie przytrzymywane ręką

- Należy wyposażyć niniejszy przyrząd w odpowiednie oprzyrządowanie do wkręcania / wykręcania śrub i wkrętów i podłączyć go do sieci zasilającej poprzez łącze nastawnika.
- Trzymać przyrząd za uchwyt podczas dokręcania wyrobu.
- Naciśnij dźwignię, aby uruchomić narzędzie.
- Narzędzie zatrzymuje się po osiągnięciu ustawionej wartości momentu dokręcania.
- Przed kolejną operacją dokręcania silnik musi mieć 3 sekundy pauzy.
- Nieprzestrzeganie tej zasady może spowodować przegrzanie, którego skutkiem będzie uszkodzenie.
- Jest to traktowane jako błąd obsługi, a tego typu uszkodzenie nie jest objęte gwarancją.

Ponieważ siła reakcji na przyrządzie rośnie proporcjonalnie do momentu obrotowego dokręcania – należy upewnić się, że przyrząd jest w doskonałym stanie technicznym i że urządzenie sterujące jest prawidłowo zaprogramowane – w celu uniknięcia wszelkich nieprzewidywalnych zachowań się przyrządu, mogących skaleczyć operatora.

Sterowanie i oprogramowanie
Zasilanie z EDU2AE, zależnie od modelu.

SMAROWANIE
Nie należy nakładać zbyt dużo smaru na koła zębate lub łożyska, nałożenie cienkiej warstwy wystarcza. Samrauj po 300 000 cyklach.

INSTRUKCJA KONSERWACJI
Konserwacja winna być wykonywana wyłącznie przez wykwalif kowany personel

- Przed podjęciem jakichikolwiek prac konserwacyjnych – przede wszystkim należy odłączyć przyrząd od zasilania.
- Podejmując demontaż czy montaż przyrządu–należy zachować następujące środki ostrożności:
  - sprawdzić czy skrzynka przyłączeniowa -nie znajduje się pod napięciem,
  - odłączyć przewód zasilający.

Zanim podejmie się jakiekolwiek usuwanie części i komponentów, olejów i smarów itp. z przyrządu należy upewnić się czy przestrzegane są właściwe procedury bezpieczeństwa. Zgodnie z Dyrektywą 2002/96/CE dotyczącą odpadów takich jak urządzenia elektryczne i elektroniczne (WEEE), produkt ten podlega recyklingowi.

GWARANCJA FIRMY KOLVER

1. Niniejszy produkt firmy KOLVER jest objęty gwarancją z tytułu wadliwego wykonania lub wad materiałowych przez okres maksymalnie 12 miesięcy od daty zakupu, pod warunkiem, że jego użytkowanie jest ograniczone w tym okresie do pracy jednozmianowej. Jeżeli intensywność użytkowania wykracza ponad pracę jednozmianową, okres gwarancji zostanie proporcjonalnie skrócony.
2. Jeżeli w okresie gwarancyjnym produkt wykazuje prawdopodobne wady produkcyjne lub materiałowe, powinien zostać zwrócony do firmy KOLVER lub jej dystrybutora wraz z krótkim opisem domniemanej wady. Firma KOLVER zapewni, według swojego uznania, nieodpłatną naprawę lub wymianę elementów, które zostaną uznane za wadliwe z powodu wad w wykonawstwie lub wad materiałowych.
3. Niniejsza gwarancja nie ma zastosowania do produktów, które były używane nadmiernie lub niezgodnie z przeznaczeniem lub zostały zmodyfikowane, lub które zostały naprawione za pomocą części zamiennych innych niż oryginalne części f rmy KOLVER lub naprawione przez kogoś innego niż f rma KOLVER lub jej autoryzowane punkty serwisowe.
4. Firma KOLVER nie uznaje roszczeń z tytułu kosztów robocizny lub innych wydatków poniesionych w związku z wadliwymi produktami.
5. Wszelkie bezpośrednie, uboczne lub wtórne szkody wynikłe z jakichkolwiek wad są wyraźnie wykluczone z gwarancji.
6. Niniejsza gwarancja udzielana jest w miejsce wszelkich innych gwarancji lub warunków, wyraźnych lub domniemanych, dotyczących jakości, przydatności handlowej lub przydatności do jakiegokolwiek innego konkretnego celu.
7. Żaden dystrybutor, firma podległa lub pracownik firmy KOLVER, ani jakakolwiek inna osoba nie jest upoważniona do jakiegokolwiek rozszerzania lub modyfikowania warunków niniejszej ograniczonej gwarancji.

Vers. 190121

CZ

VAROVÁNÍ: Aby nedošlo ke zranění, seznamte se před použitím či údržbou tohoto nářadí s následujícími informacemi a zvlášť dodávanými bezpečnostními pokyny (kat.č. 0MS000). Technické údaje a popis výrobků se mohou měnit bez předchozího upozornění.

PROHLÁŠENÍ K POUŽITÍ VÝROBKU
Nářadí (třída I) vhodné pouze pro průmyslové prostředí. Je určeno k utahování nebo povolování spojů v dřevěných, kovových, či plastových materiálech. Žádné jiné použití není povoleno. Pouze pro profesionální účely.

TECHNICKÉ ÚDAJE
Hlučnost: < 70 dB(A)
Úroveň vibrací: < 2,5 m/s²

Prohlášení o hlučnosti a vibracích
Tyto deklarované hodnoty byly zjištěny při laboratorním testování nového výrobku v souladu s uvedenými normami a nelze je používat k hodnocení rizikovosti. Hodnoty naměřené na jednotlivých pracovištích mohou být vyšší než deklarované hodnoty. Skutečné hodnoty hluku a vibrací a s tím související negativní vlivy na konkrétního uživatele jsou jedinečné a závisí na způsobu, jakým uživatel pracuje, na uspořádání pracoviště, na výrobku a také na době, po kterou je uživatel působení těchto vlivů vystaven, a rovněž na jeho fyzické kondici. Společnost KOLVER nezodpovídá za následky, pokud budou pro účely hodnocení jednotlivých rizik na konkrétních pracovištích v situacích, jež nemůžeme nijak ovlivnit, použity deklarované hodnoty namísto hodnot odrážejících skutečnou expozici uživatele těmto negativním vlivům.

PROVOZNÍ REŽIM
Nářadí je možno používat jako přenosné nebo napevno zabudované.

Přenosný nástroj
- Upněte nářadí do vhodného držáku a přes ovládací skříňku jej zapojte do elektrického zdroje.
- Uchopte nářadí za rukojeť a nasaďte na šroubovaný spoj.
- Nářadí zapněte stisknutím spouštěcí páky.
- Nářadí se zastaví, když je dosaženo přednastaveného krouticího momentu.
- Na každou sekundu provozu potřebuje motor tři sekundy v klidu.
- Pokud tomu tak není, hrozí nebezpečí přehřátí a poškození motoru.
- Nedodržování tohoto režimu bude považováno za nesprávné použití a v takovém případě nelze uplatnit záruku.

Reakční sila stoupá s kroutícím momentem utahování – ujistěte se, že je nářadí v dokonalém pracovním stavu a že je ovládací skříňka správně naprogramována. Předejdete tím zranění obsluhy v důsledku neočekávaného chování nářadí.

Ovládání a software
Napájení pomocí EDU2AE v závislosti na modelu.

MAZÁNÍ
Nepoužívejte příliš mnoho maziva na převody a ložiska: tenká vrstva postačí. Použijte minimální množství maziva pro snazší identifikaci komponentů při montáži.
Převodovku a ložiska nepřemazávejte, pro zajištění správné funkce postačuje pouze tenká vrstva vazelíny. Promazávaní je nutné po každých 300.000 cyklech.

POKYNY K ÚDRŽBĚ
Údržbu smí provádět pouze kvalif kovaný personál.
- Než zahájíte jakoukoliv údržbu, odpojte nářadí od zdroje.
- Při demontáži a opětovné montáži nářadí dodržujte následující:
  - zkontrolujte, zda je zdroj vypnut
  - odpojte napájecí kabel

Při odstraňování složek, maziv, atd. …zajistěte, aby byly dodrženy příslušné bezpečnostní postupy. V souladu se Směrnicí 2002/96/ES o likvidaci elektrických a elektronických zařízení (OEEZ) je třeba tento výrobek zlikvidovat v rámci recyklačního program.

ZÁRUKA FIRMY KOLVER
1. Na výrobek KOLVER platí záruka na výrobní a materiálové vady na maximální období 12 měsíců od data nákupu od firmy KOLVER, že jeho použití je omezeno na jednosměnný provoz po toto období. Pokud míra použití překročí míru použití během jednosměnného provozu, záruční období bude poměrným dílem zkráceno.
2. Pokud se u výrobku v záruční době projeví výrobní nebo materiálová vada, je třeba zaslat výrobek zpět firmě KOLVER nebo jejímu zástupci spolu se stručným popisem závady.. Firma KOLVER podle vlastního uvážení provede bezplatnou opravu nebo výměnu výrobku nebo součástí, u kterých je dle jejího názoru závada způsobena výrobní nebo materiálovou vadou.
3. Platnost této záruky zaniká u výrobků, které byly vystaveny hrubému nebo nesprávnému zacházení, které byly modifikovány nebo opraveny s použitím jiných než originálních náhradních dílů KOLVER anebo někým jiným než firmou KOLVER anebo jejími autorizovanými servisními středisky.
4. Firma KOLVER nepřijímá nároky na odškodnění za práci ani za jiné výdaje žádané u vadných výrobků.
5. Náhrady jakýchkoli přímých, náhodných nebo následných škod následkem jakékoliv vady se výslovně vylučují.
6. Tato záruka nahrazuje veškeré další výslovné či implikované podmínky, týkající se kvality, obchodovatelnosti nebo způsobilosti k určitému účelu.
7. Podmínky této omezené záruky není žádný zástupce či zaměstnanec firmy KOLVER oprávněn jakkoliv měnit či doplňovat.

Vers. 190121

SK

UPOZORNENIE: Aby sa znížilo riziko poranenia, prečítajte si nasledujúce informácie, ako aj osobitne priložené bezpečnostné opatrenia (položka číslo 0MS000) a snažte sa im porozumieť. Vlastnosti a popis našich výrobkov sa môžu meniť bez toho, aby ste na to boli vopred upozornení.

DEKLARÁCIA O POUŽITÍ
Nástroj (trieda I) vhodný iba pre použitie v priemyselnom prostredí. Má sa používať na uťahovanie alebo uvoľňovanie spojov v drevených, kovových alebo umelohmotných materiáloch. Nesmie sa používať na žiadne iné účely. Je určený iba pre použitie kvalifikovaným personálom.

ÚDAJE
Hladina akustického tlaku: < 70 dB(A)
Vážená efektívna hodnota zrýchlenia vibrácií: <2.5 m/s²

Deklarácia o emisiách hluku a vibrácií
Tieto uvedené hodnoty boli získané v podmienkach laboratórneho testovania, ktoré je v súlade s uvedenými normami a neodporúča sa ich využitie v rizikovom prostredí. Hodnoty namerané na jednotlivých pracoviskách môžu byť vyššie, než sú uvedené hodnoty. Skutočné hodnoty expozície a riziko poranenia sú u každého užívateľa individuálne a závisia od spôsobu práce, opracovávanej súčiastky, od pracoviska, ako aj od času expozície a fyzickej kondície užívateľa. Spoločnosť KOLVER preto nemôže niesť zodpovednosť za využívanie uvedených hodnôt namiesto tých, ktoré vyjadrujú skutočnú expozíciu pri individuálnom zhodnotení rizika na pracovisku, pretože na tieto nemá žiaden vplyv.

REŽIM OPERÁCIE
Nástroj môže byť použitý ako prenosný alebo byť pripojený napevno ku stroji.

Prenosný nástroj
- Pripevnite na nástroj zodpovedajúce upevňovacie zariadenie a potom ho pripojte pomocou kontrolného zariadenia do elektrickej siete.
- Držte nástroj za rúčku a priložte ho ku uzáveru, ktorý je potrebné pritiahnuť.
- Stlačte páčku, aby ste zariadenie spustili.
- Zariadenie sa zastaví, keď sa dosiahne prednastavený krútiaci moment.
- Na každú sekundu prevádzky musí motor 3 sekundy stáť.
- Nedodržanie môže spôsobiť prehriatie motora a eventuálne aj jeho poškodenie.
- Bude to považované za nesprávny spôsob použitia a v tom prípade sa na to nevzťahuje záruka.

Keďže reakčná sila nástroja sa zvyšuje priamo úmerne jeho krútiacemu momentu uťahovania, je potrebné sa presvedčiť, že nástroj je vo vynikajúcom stave a že kontrolné zariadenie je správne naprogramované, čím sa zníži riziko poranenia operátora následkom neočakávaného správania sa nástroja.

Ovládanie a software
Napájanie spôsobom EDU2AE v závislosti od modelu.

MAZANIE
Nepoužívajte príliš mnoho mazadla na prevody a ložiská; tenká vrstva bude stačiť. Premažte po 300 000 cykloch.

NÁVOD NA ÚDRŽBU
Údržbu môže vykonávať iba kvalifikovaný personál.
- Pred začatím údržby: odpojte nástroj.
- Počas demontáže/montáže nástroja dodržiavajte nasledujúce ochranné opatrenia:
  - Skontrolujte, či je kontrolné zariadenie vypnuté.
  - Odpojte kábel.

Pri odstraňovaní súčiastok, mazív, atď.…dbajte na dodržiavanie zodpovedajúcich bezpečnostných predpisov. Tento produkt musí byť v súlade s vyhláškou č. 2002/96/CE o nakladaní s elektrozariadeniami a s elektroodpadom (WEEE) recyklovaný.

ZÁRUKA FIRMY KOLVER
1. Tento výrobok firmy KOLVER je v záruke voči chybnej výrobe alebo materiálom na maximálnu dobu 12 mesiacov od dátumu nákupu od firmy KOLVER, že jeho použitie je obmedzené na jednu prevádzkovú zmenu v priebehu tejto lehoty. Ak frekvencia použitia presiahne jednu prevádzkovú zmenu záručná lehota výrobku bude primerane skrátená.
2. Ak na výrobku dôjde v priebehu záručnej lehoty k poruche, vyplývajúcej z chybnej výroby alebo chybného materiálu, výrobok vráťte firme KOLVER alebo do jej zastupiteľskej predajne spolu s krátkym popisom poruchy a uhradením nákladov na prepravu. Firma KOLVER na základe vlastného uváženia zabezpečí opravu alebo bezplatnú výmenu tých výrobkov, u ktorých boli poruchy spôsobené chybnou výrobou alebo materiálom.
3. Táto záruka sa nevzťahuje na výrobky, s ktorými sa nesprávne zaobchádzalo, ktoré boli nesprávne použité alebo modifikované, pri oprave ktorých neboli použité originálne súčiastky firmy KOLVER, alebo ktoré neboli opravené firmou KOLVER, či jej oprávneným servisným strediskom.
4. Firma KOLVER neprijíma žiadne nároky na náklady spojené s vynaloženou prácou alebo na náklady vynaložené na chybné výrobky.
5. Akékoľvek priame, náhodné alebo následné škody vyplývajúce z akejkoľvek poruchy sú výslovne vylúčené.
6. Táto záruka sa vydáva namiesto všetkých ostatných záruk, alebo podmienok vyjadrených alebo naznačených vo vzťahu ku kvalite, predaju alebo vhodnosti pre akýkoľvek určitý účel.
7. Žiaden zástupca, ani zamestnanec firmy KOLVER, nie je oprávnený akýmkoľvek spôsobom doplňovať’ alebo modifikovať podmienky tejto obmedzenej záruky. Je však možné za príplatok predĺžiť záručnú dobu. Ďalšie informácie získate na kolver@kolver.it.

Vers. 190121

PLUTO..D/N: ESPLOSO/ *EXPLODED VIEW*+ INGOMBRO/ *DRAWING*

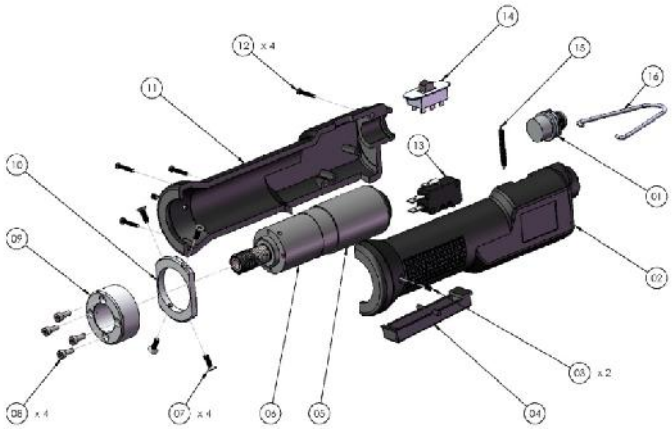

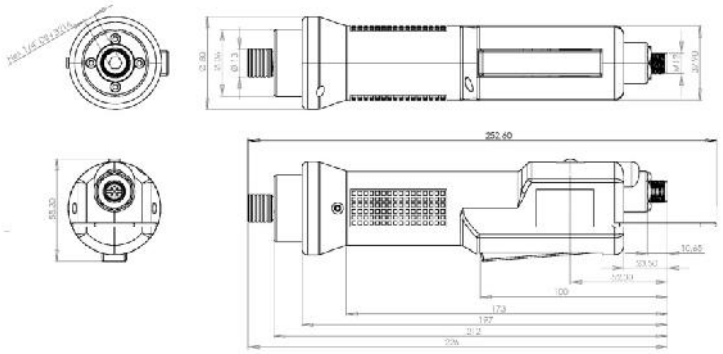

PARTI DI RICAMBIO/ *SPARE PARTS*

RIF	DESCRIZIONE/ *DESCRIPTION*	COD.
1	Connettore/ *Connector* M 5 pin	201666
2	Impugnatura dx/ *Right housing*	220354/ESD
3	Grano/ *Screw* M4x4 (2)	895014
4	Leva azionamento micro/ *Start lever*	221455/ESD
5	Motore/ *Motor* PL3	231509/3
	Motore/ *Motor* PL6	231509/6
	Motore/ *Motor* PL10	231509
	Motore/ *Motor* PL15	231509/15
6	Riduttore/ *Reduction gears* PL3	231510/3N
	Riduttore/ *Reduction gears* PL6	231510/6N
	Riduttore/ *Reduction gears* PL10	231510/N
	Riduttore/ *Reduction gears* PL15	231510/15N
7	Vite/ *Screw* M3x10 TSP (4)	234513
8	Vite/ *Screw* 8.8M 3x18 (4)	231506
9	Anello di supporto/ *Support ring* KP05	234511/K
10	Staffa fissaggio motore/ *Support plate*	234512
11	Impugnatura sx / *Left housing*	220358/ESD
12	Vite/ *Screw* 2,2x16 inox (4)	220059
13	Microswitch	201056
14	Interruttore reversibilità/ *Reverse switch*	200057
15	Molla/ *Spring*	219855
16	Gancio/ *Hook*	200060
	Cavo/ *Cable* 5 pin 2,5 mt.	200063

Vers. 190121

PLUTO..P/N:
ESPLOSO/ *EXPLODED VIEW*

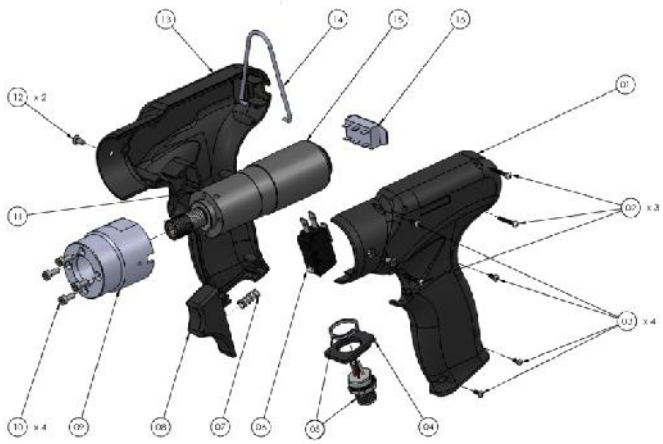

INGOMBRO/ *DRAWING*

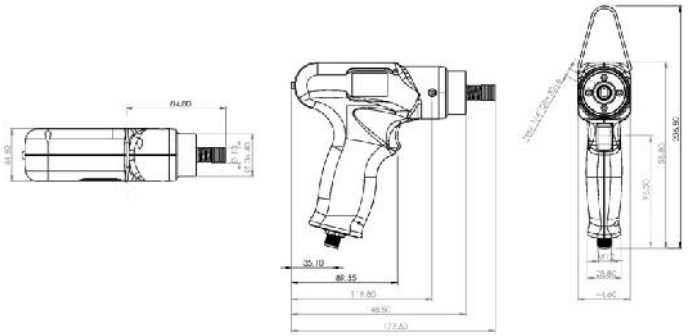

PLUTO..P/N: PARTI DI RICAMBIO/ *SPARE PARTS*

RIF	DESCRIZIONE/*DESCRIPTION*	COD.
1	Impugnatura dx/ *Right housing*	234501/ESD
2	Vite/ *Screw* 2,2x16 inox (3)	220059
3	Vite impugnatura/ *Screw* (4)	234504
4	Portaconnettore/ *Connector seat*	234506/ESD
5	Connettore/ *Connector* M 5 pin	231666
6	Micro interruttore/*Start switch*	201056
7	Molla tasto/ *Spring Lever*	221061
8	Tasto/ *Trigger*	234503/ESD
9	Portamotore/ *Motor cover*	234505
10	Vite a brugola/ *Screw* M3 x 8 (4)	231508/ZN
11	Riduttore/ *Reduction gears* PL3	231510/3N
	Riduttore/ *Reduction gears* PL6	231510/6N
	Riduttore/ *Reduction gears* PL10	231510/N
	Riduttore/ *Reduction gears* PL15	231510/15N
12	Vite/ *Screw* M3x5 inox (2)	801002
13	Impugnatura sx/ *Left housing*	234502/ESD
14	Gancio/ *Hook*	200060
15	Motore/ *Motor* PL3	231509/3
	Motore/ *Motor* PL6	231509/6
	Motore/ *Motor* PL10	231509
	Motore/ *Motor* PL15	231509/15
16	Interr. di reversibilità/ *Reverse switch*	200057
	Cavo/ *Cable* 5 pin 2,5 mt.	200063

Vers. 190121

PLUTO..P/U/N:

ESPLOSO/ *EXPLODED VIEW*

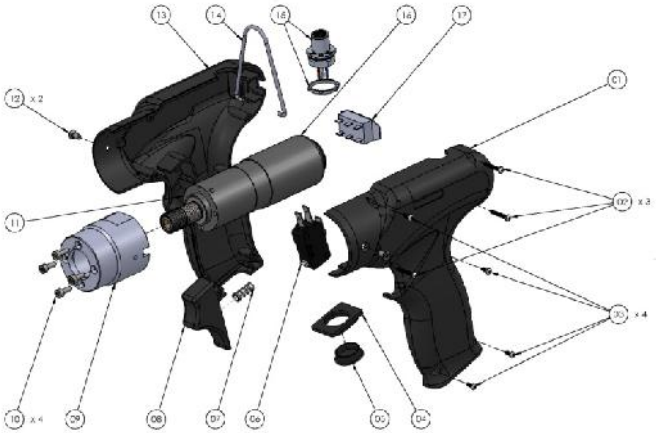

INGOMBRO/ *DRAWING*

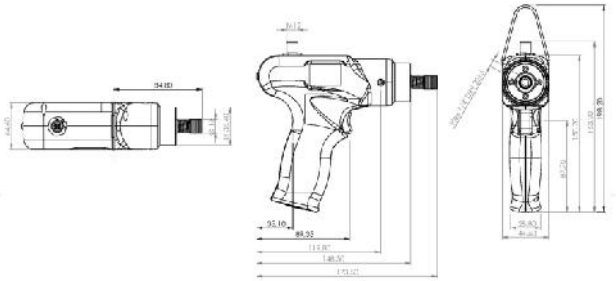

PLUTO..P/U/N: PARTI DI RICAMBIO/ *SPARE PARTS*

RIF	DESCRIZIONE/*DESCRIPTION*	COD.
1	Impugnatura dx/ *Right housing*	234501/ESD
2	Vite/ *Self* 2,2x16 inox (3)	220059
3	Vite impugnatura/ *Screw* (4)	234504
4	Portaconnettore/ *Connector seat*	234506/ESD
5	Tappo porta connettore/ *Connector cover*	234514
6	Micro interruttore/*Start switch*	201056
7	Molla tasto/ *Spring Lever*	221061
8	Tasto/ *Trigger*	234503/ESD
9	Portamotore/ *Motor cover*	234505
10	Vite a brugola/ *Screw* M3x8 (4)	231508/ZN
11	Riduttore/ *Reduction gears* PL3	231510/3N
	Riduttore/ *Reduction gears* PL6	231510/6N
	Riduttore/ *Reduction gears* PL10	231510/N
	Riduttore/ *Reduction gears* PL15	231510/15N
12	Vite/ *Screw* M3x5 inox (2)	801002
13	Impugnatura sx/ *Left housing*	234502/ESD
14	Gancio/ *Hook*	200060
15	Connettore/ *Connector* M 5 pin	231666
16	Motore/ *Motor* PL3	231509/3
	Motore/ *Motor* PL6	231509/6
	Motore/ *Motor* PL10	231509
	Motore/ *Motor* PL15	231509/15
17	Interr. di reversibilità/ *Reverse switch*	200057
	Cavo/ *Cable* 5 pin 2,5 mt.	200063

Vers. 190121

PLUTO..CA/N:
ESPLOSO/ *EXPLODED VIEW*

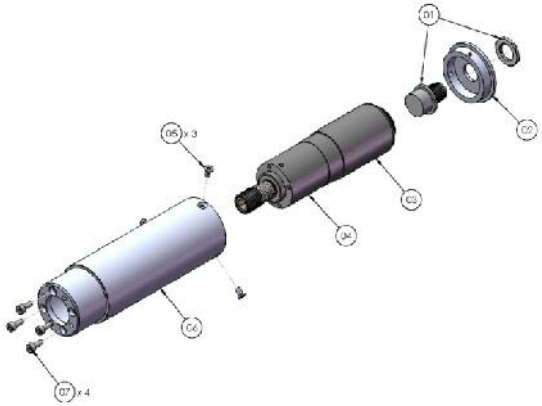

INGOMBRO/ *DRAWING*

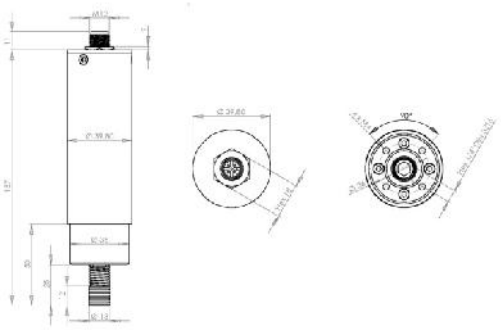

PARTI DI RICAMBIO/ *SPARE PARTS*

RIF	DESCRIZIONE/ *DESCRIPTION*	COD.
1	Connettore/ *Connector* M 5 pin	201666
2	Coperchio/ *Cap*	800304
3	Motore/ *Motor* PL3	231509/3M
	Motore/ *Motor* PL6	231509/6M
	Motore/ *Motor* PL10	231509/10M
	Motore/ *Motor* PL15	231509/15M
4	Riduttore/ *Reduction gears* PL3	231510/3M
	Riduttore/ *Reduction gears* PL6	231510/6M
	Riduttore/ *Reduction gears* PL10	231510/10M
	Riduttore/ *Reduction gears* PL15	231510/15M
5	Vite/ *Screw* M3x6 (3)	801002
6	Cannotto alluminio/ *Aluminium body*	234510
7	Vite brugola/ *Screw* M3x8 (4)	231504/ZN
	Cavo/ *Cable* 5 pin 2,5 mt.	200063

Vers. 190121

PLUTO20CA:

ESPLOSO/ *EXPLODED VIEW*

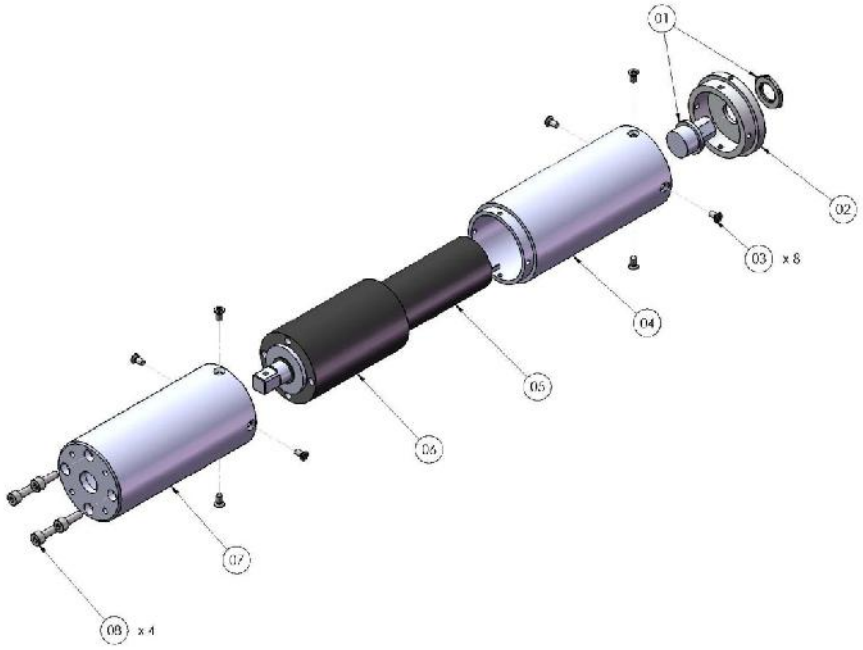

INGOMBRO/ *DRAWING*

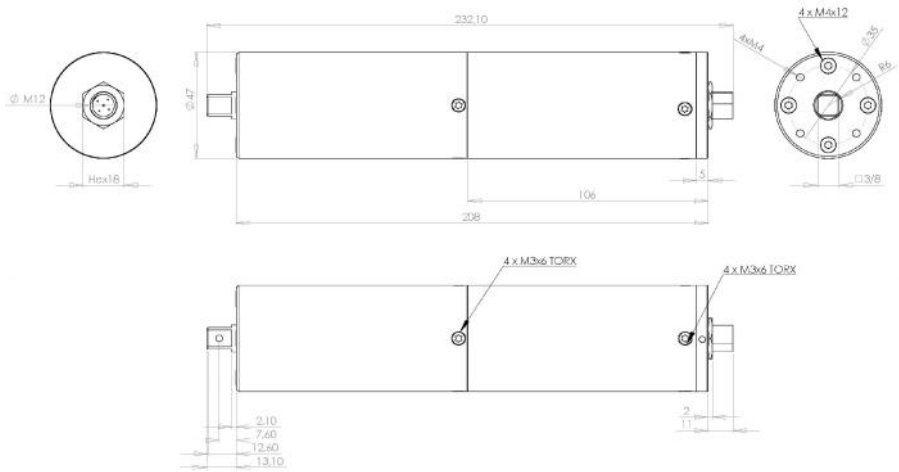

PARTI DI RICAMBIO/ *SPARE PARTS*

RIF	DESCRIZIONE/ *DESCRIPTION*	COD.
1	Connettore/ *Connector* M 5 pin	201666
2	Coperchio/ *Cap*	234605
3	Vite/ *Screw* M3x6 Torx (8)	801002
4	Cannotto alluminio/ *Aluminium body*	234603
5	Motore/ *Motor*	231609/20
6	Riduttore/ *Reduction gears*	231610/20
7	Cannotto alluminio/ *Aluminium body*	234601
8	Vite/ *Screw* M4x12 (4)	231507
	Cavo/ *Cable* 5 pin 2,5 mt.	200063

Vers. 190121

PLUTO20CA/SR:
ESPLOSO/ *EXPLODED VIEW*

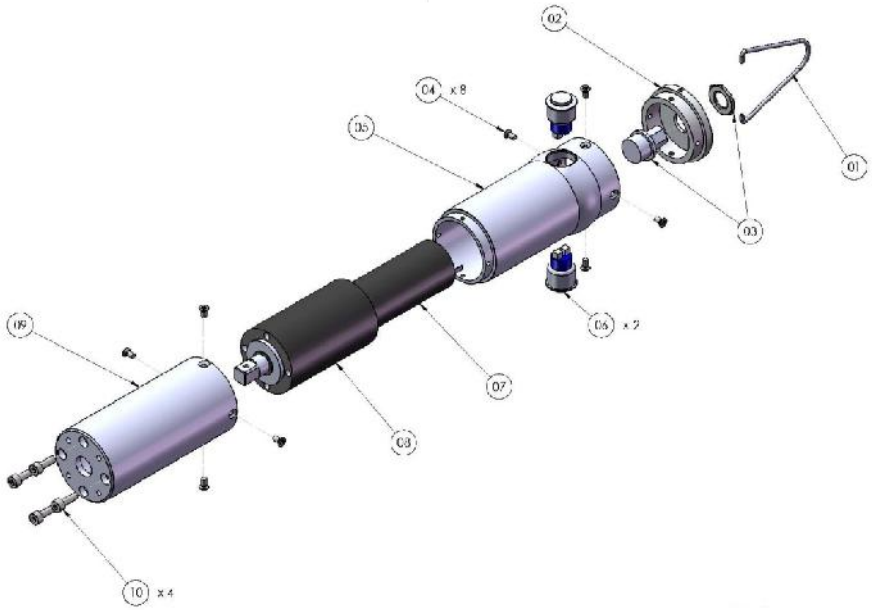

PARTI DI RICAMBIO/ *SPARE PARTS*

RIF	DESCRIZIONE/ *DESCRIPTION*	COD.
1	Gancio/ *Hook*	200060
2	Coperchio/ *Cap*	234605
3	Connettore/ *Connector* M 5 pin	201666
4	Vite/ *Screw* M3x6 Torx (8)	801002
5	Cannotto alluminio/ *Aluminium body*	234602
6	Tasto/ *Button* (2)	800313/2/2
7	Motore/ *Motor*	231609/20
8	Riduttore/ *Reduction gears*	231610/20
9	Cannotto alluminio/ *Aluminium body*	234601
10	Vite/ *Screw* M5x10 (4)	231507
	Cavo/ *Cable* 5 pin 2,5 mt.	200063

INGOMBRO/ *DRAWING*

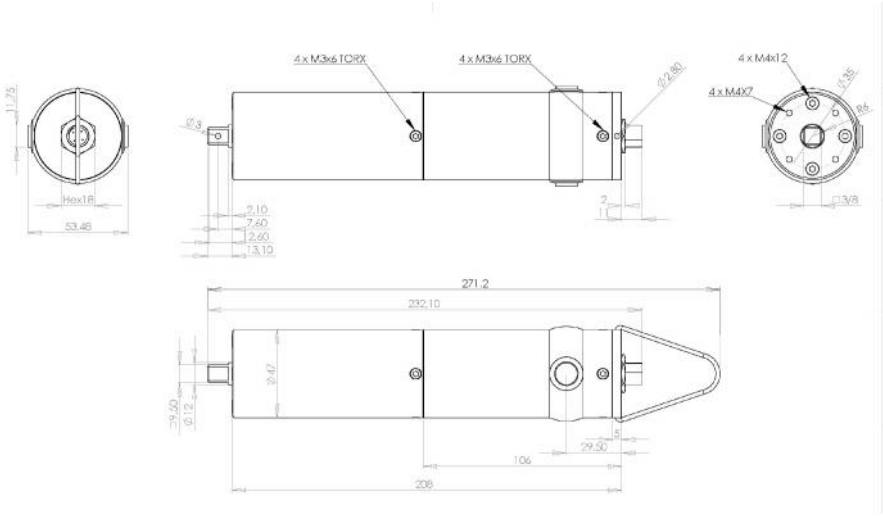

Vers. 190121

PLUTO35CA:
ESPLOSO/ *EXPLODED VIEW*

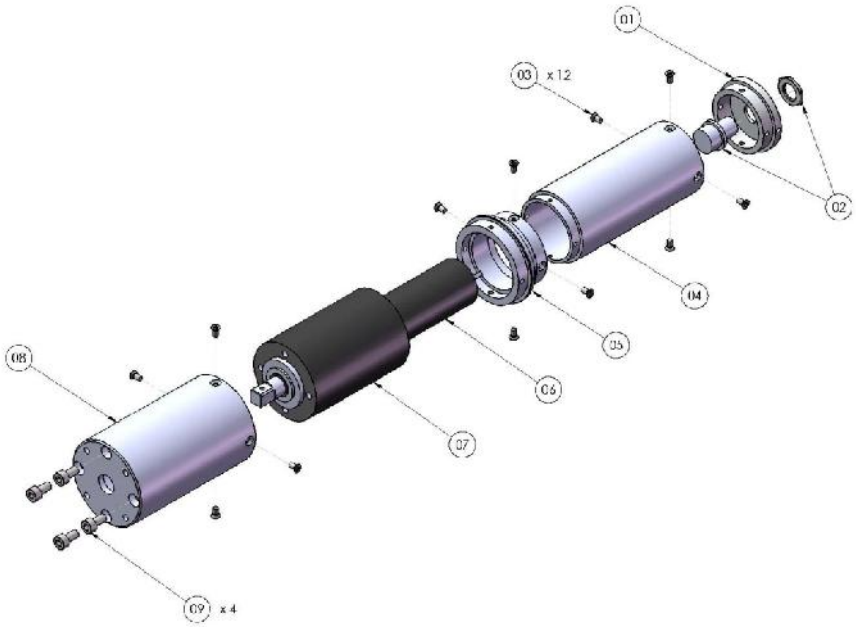

INGOMBRO/ *DRAWING*

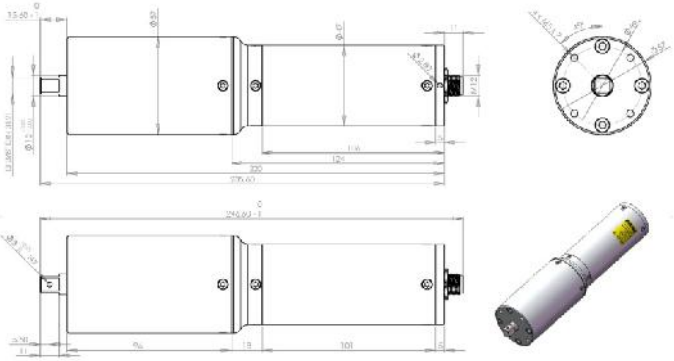

PARTI DI RICAMBIO/ *SPARE PARTS*

RIF	DESCRIZIONE/ *DESCRIPTION*	COD.
1	Coperchio/ *Cap*	234605
2	Connettore/ *Connector* M 5 pin	201666
3	Vite/ *Screw* M3x6 Torx (12)	801002
4	Cannotto alluminio/ *Aluminium body*	234603
5	Raccordo/ *Junction*	234702
6	Motore/ *Motor*	231609/30
7	Riduttore/ *Reduction gears*	231610/30
8	Cannotto alluminio/ *Aluminium body*	234701
9	Vite/ *Screw* M5x10 (4)	231503
	Cavo/ *Cable* 5 pin 2,5 mt.	200063

Vers. 190121

PLUTO35CA/SR:
ESPLOSO/ *EXPLODED VIEW*

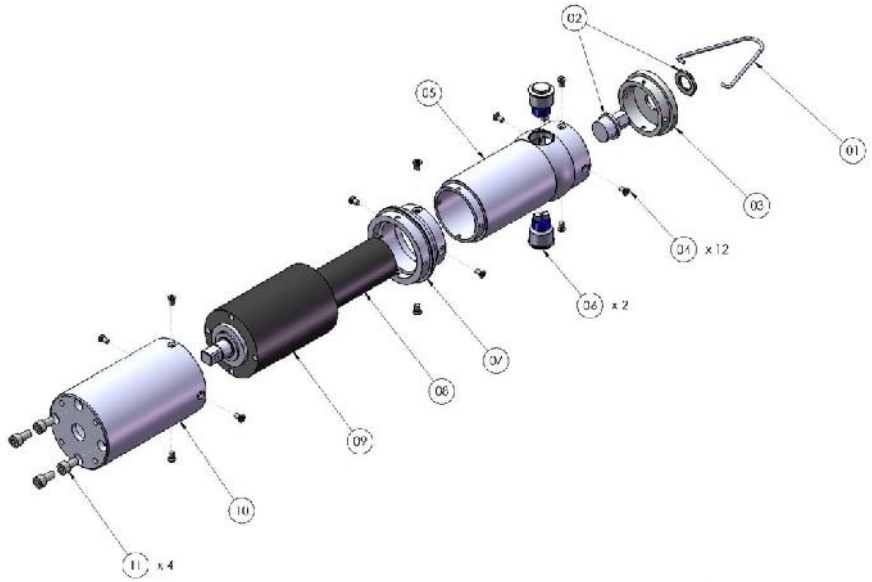

INGOMBRO/ *DRAWING*

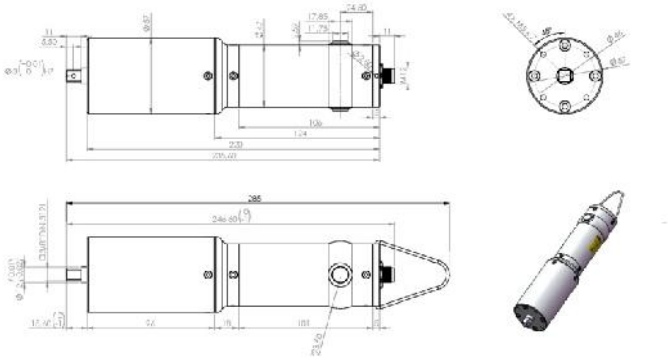

PARTI DI RICAMBIO/ *SPARE PARTS*

RIF	DESCRIZIONE/ *DESCRIPTION*	COD.
1	Gancio/ *Hook*	200060
2	Connettore/ *Connector* M 5 pin	201666
3	Coperchio/ *Cap*	234605
4	Vite/ *Screw* M3x6 Torx (12)	801002
5	Cannotto alluminio/ *Aluminium body*	234602
6	Tasto/ *Button* (2)	800313/2
7	Raccordo/ *Junction*	234702
8	Motore/ *Motor*	231609/30
9	Riduttore/ *Reduction gears*	231610/30
10	Cannotto alluminio/ *Aluminium body*	234701
11	Vite/ *Screw* M5x10 (4)	231503
	Cavo/ *Cable* 5 pin 2,5 mt.	200063

Vers. 190121

PLUTO50CA:
ESPLOSO/ *EXPLODED VIEW*

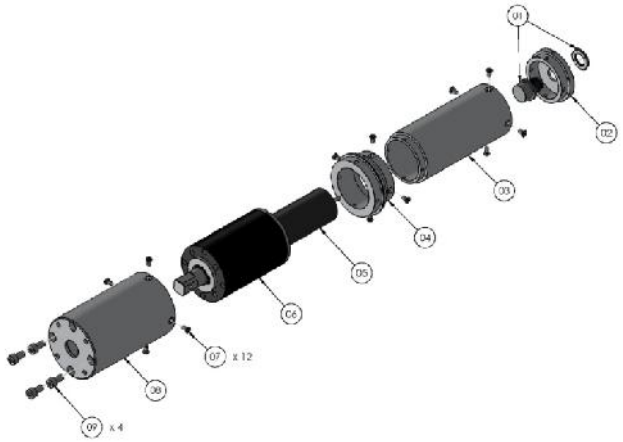

INGOMBRO/ *DRAWING*

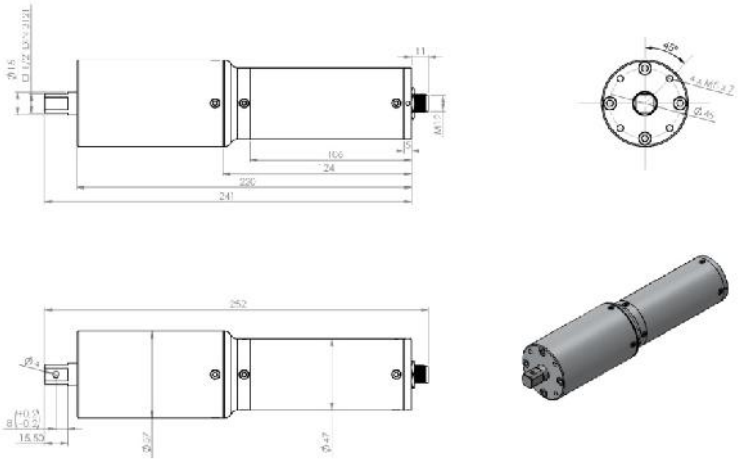

PARTI DI RICAMBIO/ *SPARE PARTS*

RIF	DESCRIZIONE/ *DESCRIPTION*	COD.
1	Coperchio/ *Cap*	234605
2	Connettore/ *Connector* M 5 pin	201666
3	Cannotto alluminio/ *Aluminium body*	234603
4	Raccordo/ *Junction*	234702
5	Motore/ *Motor*	231609/50
6	Riduttore/ *Reduction gears*	231610/50
7	Vite/ *Screw* M3x6 Torx (12)	801002
8	Cannotto alluminio/ *Aluminium body*	234801
9	Vite/ *Screw* M5x10 (4)	231503
	Cavo/ *Cable* 5 pin 2,5 mt.	200063

Vers. 190121

PLUTO50CA/SR:
ESPLOSO/ *EXPLODED VIEW*

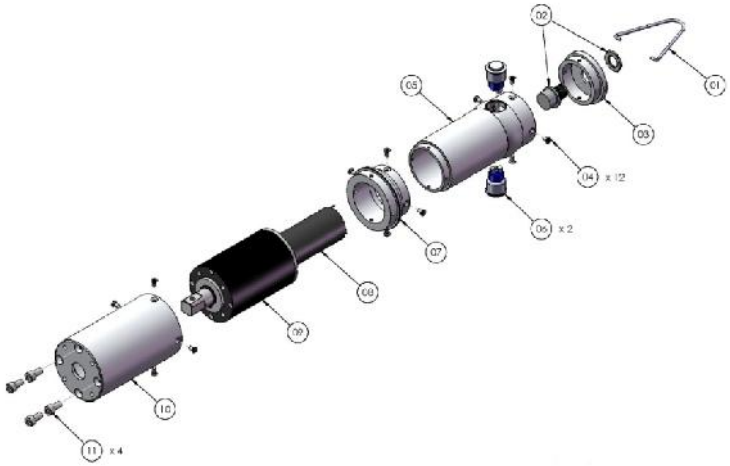

RIF	DESCRIZIONE/ *DESCRIPTION*	COD.
1	Gancio/ *Hook*	200060
2	Connettore/ *Connector* M 5 pin	201666
3	Coperchio/ *Cap*	234605
4	Vite/ *Screw* M3x6 Torx (12)	801002
5	Cannotto alluminio/ *Aluminium body*	234602
6	Tasto/ *Button* (2)	800313/2
7	Raccordo/ *Junction*	234702
8	Motore/ *Motor*	231609/50
9	Riduttore/ *Reduction gears*	231610/50
10	Cannotto alluminio/ *Aluminium body*	234801
11	Vite/ *Screw* M5x10 (4)	231503
	Cavo/ *Cable* 5 pin 2,5 mt.	200063

INGOMBRO/ *DRAWING*

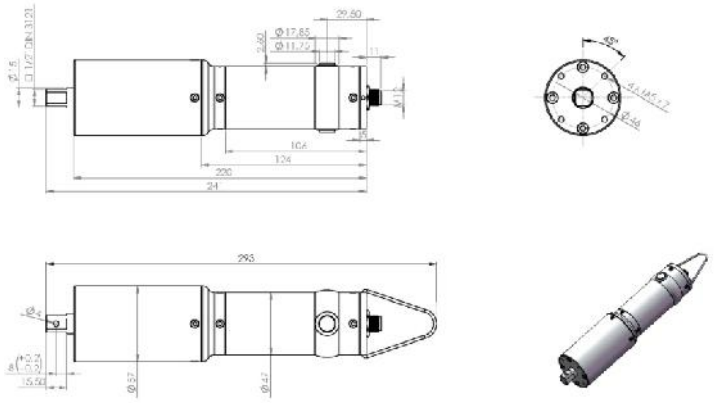

Vers. 190121

PL..CA/FN2

ESPLOSO/ *EXPLODED VIEW*

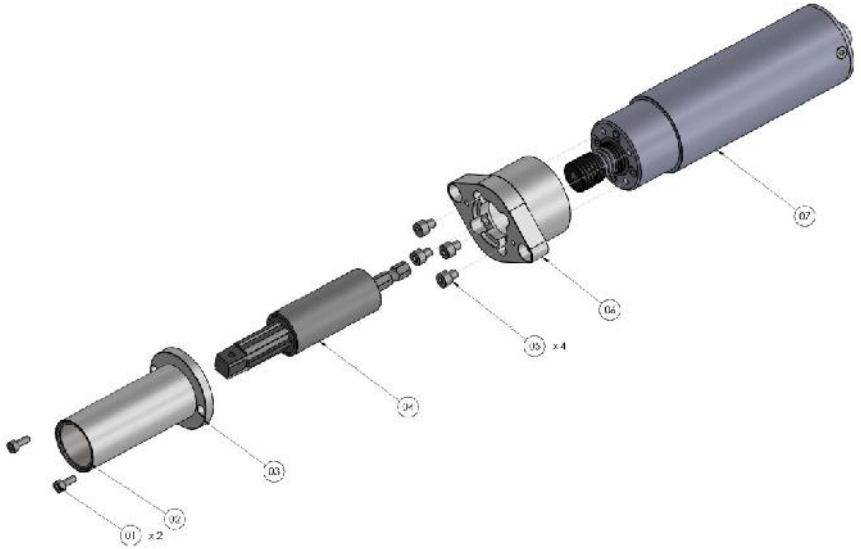

PARTI DI RICAMBIO/ *SPARE PARTS*

RIF	DESCRIZIONE/ *DESCRIPTION*	COD.
1	Vite/ *Screw* M3x8 (2)	231508/ZN
2	Permaglide	800317/1
3	Bussola guida telescopica/ *Telescopic drive bush*	234548
4	Compensatore/ *Axial compensator*	800320
5	Vite/ *Screw* M4x5 (4)	231502
6	Flangia supporto/ *Support plate*	234547
	Cavo/ *Cable* 5 pin 2,5 mt.	200063
7	Avvitatore/ *Screwdriver:*	
	PLUTO3CA	130303
	PLUTO6CA	133206
	PLUTO10CA/N	133211/N
	PLUTO15CA/N	133216/N

INGOMBRO/ *DRAWING*

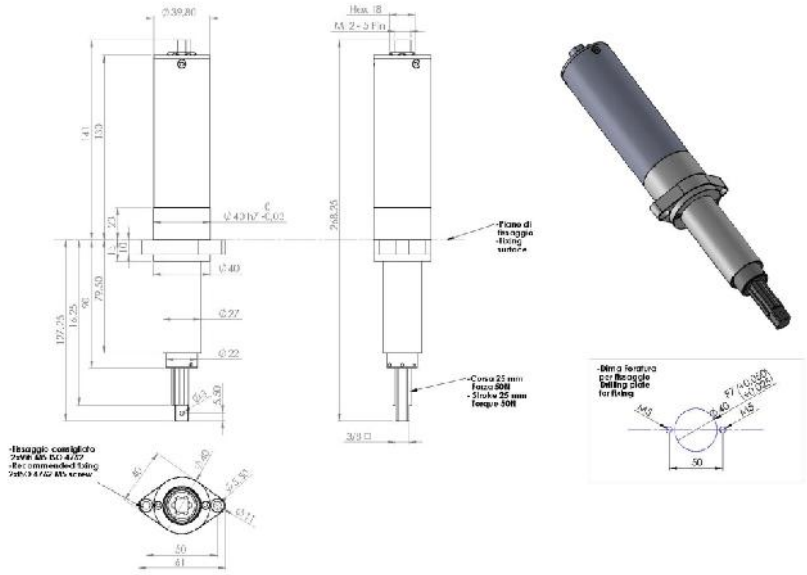

Vers. 190121

PL20CA/FN

ESPLOSO/ *EXPLODED VIEW*

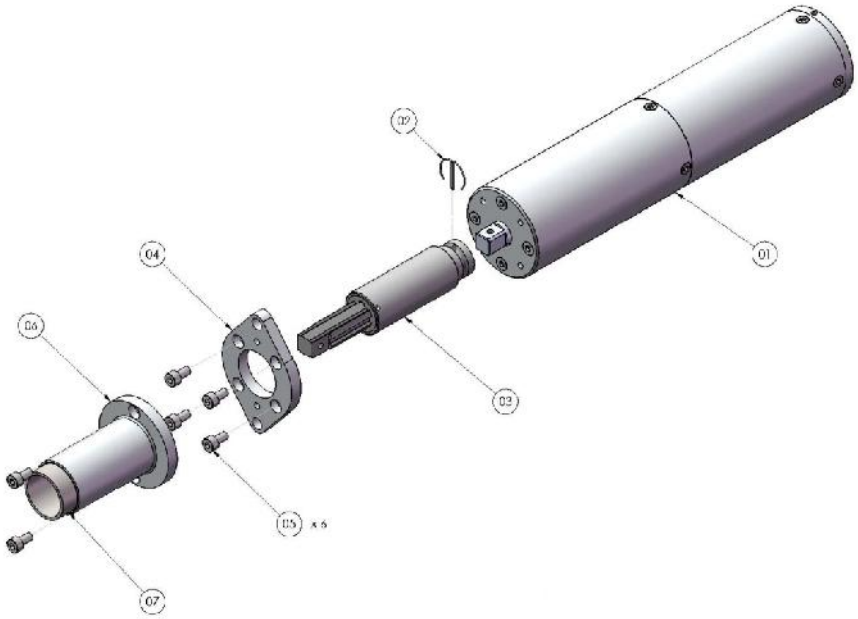

INGOMBRO/ *DRAWING*

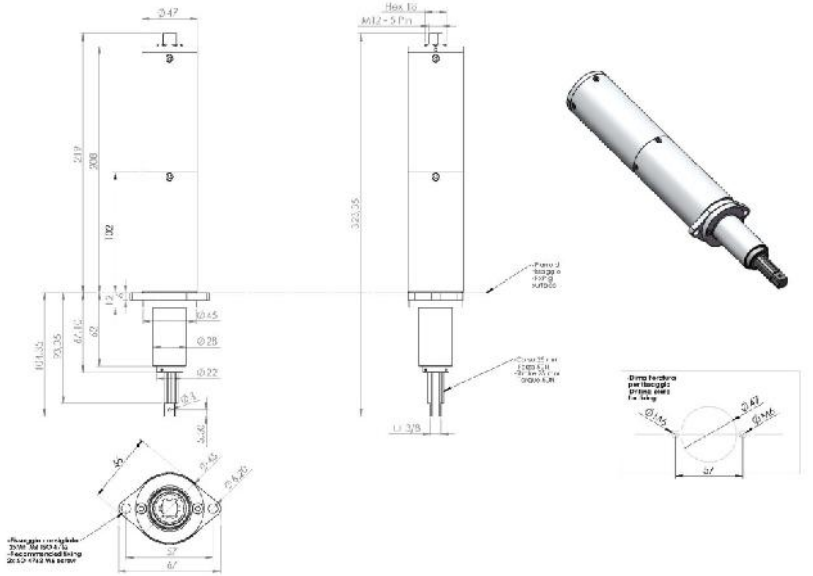

PARTI DI RICAMBIO/ *SPARE PARTS*

RIF	DESCRIZIONE/ *DESCRIPTION*	COD.
1	PLUTO20CA	133221
2	Molla di sicurezza/ *Safety spring*	FE-1301C
3	Compensatore/ *Axial compensator*	800321
4	Flangia supporto/ *Support plate*	234510/20/3
5	Vite/ *Screw* M4x8 (6)	231505
6	Bussola guida telescopica/ *Telescopic drive bush*	800302/20
7	Permaglide	800317/1
	Cavo/ *Cable* 5 pin 2,5 mt.	200063

Vers. 190121

PL35CA/FN
ESPLOSO/ *EXPLODED VIEW*

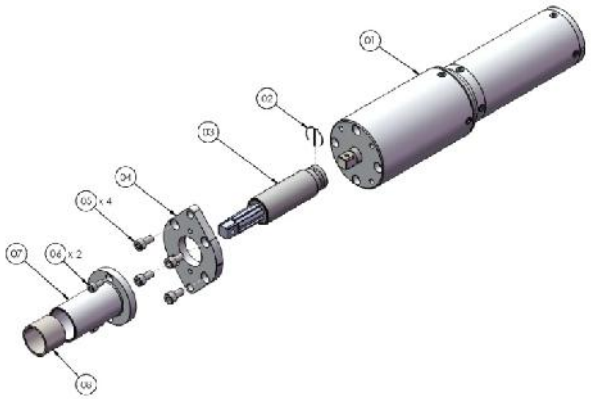

INGOMBRO/ *DRAWING*

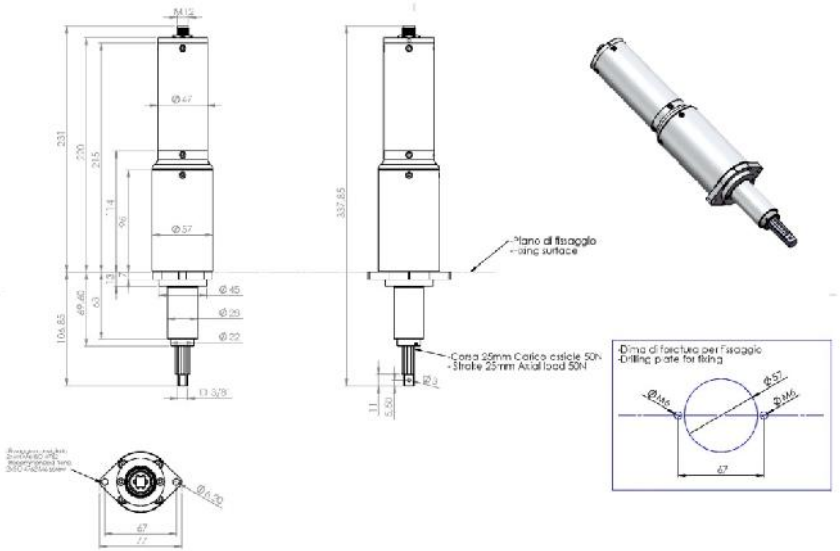

PARTI DI RICAMBIO/ *SPARE PARTS*

RIF	DESCRIZIONE/ *DESCRIPTION*	COD.
1	PLUTO35CA	133236
2	Molla di sicurezza/ *Safety spring*	FE-1301C
3	Compensatore/ *Axial compensator*	800321
4	Flangia supporto/ *Support plate*	234510/30/3
5	Vite/ *Screw* M5x10 (4)	231503
6	Vite/ *Screw* M4x8 (2)	231505
7	Bussola guida telescopica/ *Telescopic drive bush*	800302/20
8	Permaglide	800317/1
	Cavo/ *Cable* 5 pin 2,5 mt.	200063

Vers. 190121

PL50CA/FN
ESPLOSO/ *EXPLODED VIEW*

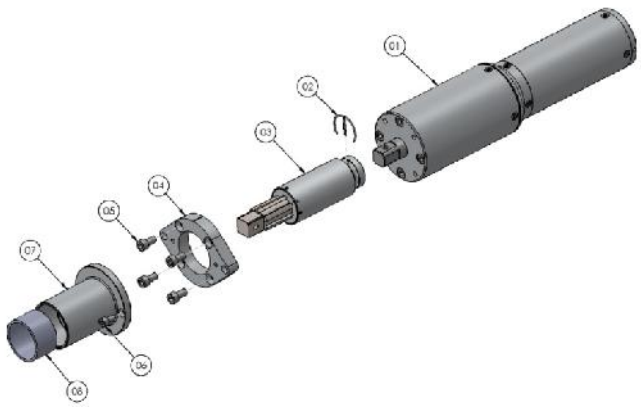

RIF	DESCRIZIONE/ *DESCRIPTION*	COD.
1	PLUTO50CA	133250
2	Molla di sicurezza/ *Safety spring*	FE-1401C
3	Compensatore/ *Axial compensator*	800319
4	Flangia supporto/ *Support plate*	234510/50
5	Vite/ *Screw* M5x10 (4)	231503
6	Vite/ *Screw* M4x8 (2)	231505
7	Bussola guida telescopica/ *Telescopic drive bush*	800302/50
8	Permaglide	800327
	Cavo/ *Cable* 5 pin 2,5 mt.	200063

INGOMBRO/ *DRAWING*

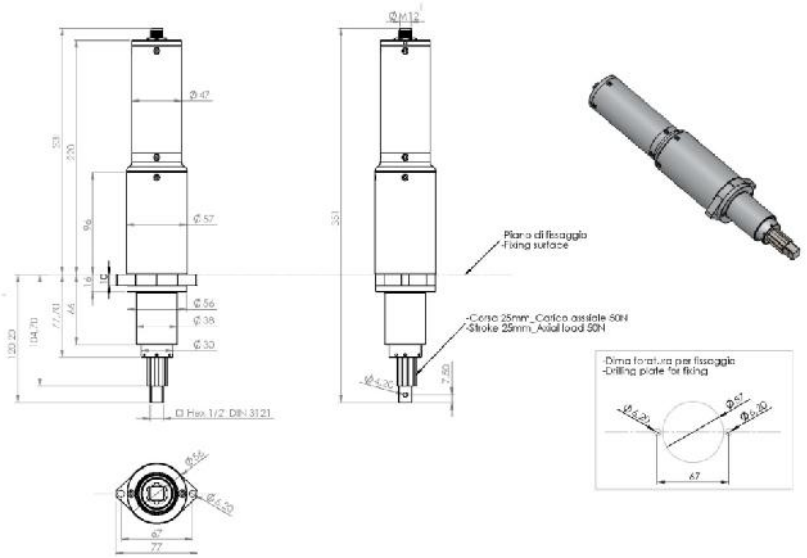

Vers. 190121

PL..PS

ESPLOSO/ *EXPLODED VIEW*

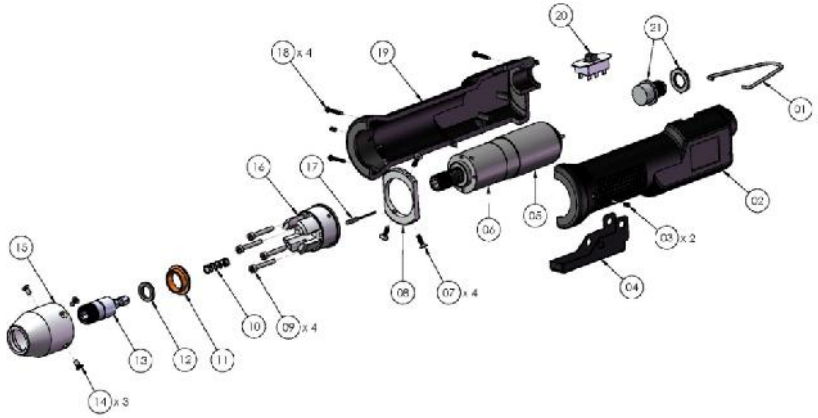

INGOMBRO/ *DRAWING*

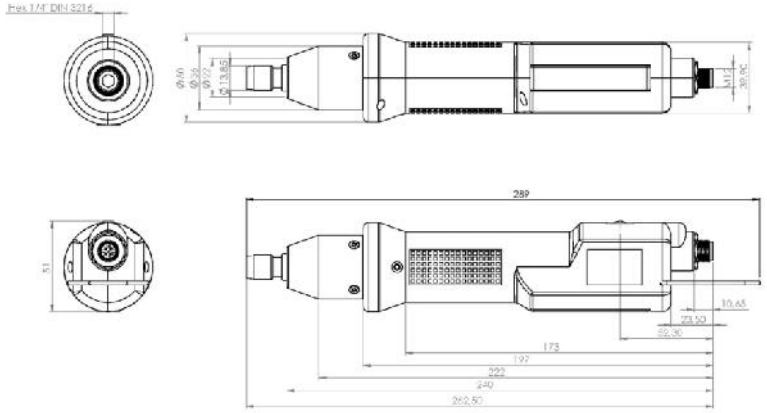

PARTI DI RICAMBIO/ *SPARE PARTS*

RIF	DESCRIZIONE/ *DESCRIPTION*	COD.
1	Gancio/ *Hook*	200060
2	Impugnatura dx/ *Right housing*	220358/ESD
3	Grano/ *Screw* M4x4 (2)	895014
4	Copritasto/ *Cover*	222055
5	Motore/ *Motor* PL3	231509/3M
	Motore/ *Motor* PL6	231509/6M
	Motore/ *Motor* PL10	231509M
	Motore/ *Motor* PL15	231509/15M
6	Riduttore/ *Reduction gears* PL3	231510/3M
	Riduttore/ *Reduction gears* PL6	231510/6M
	Riduttore/ *Reduction gears* PL10	231510/M
	Riduttore/ *Reduction gears* PL15	231510/15M
7	Vite/ *Screw* M3x10 TSP (4)	234513
8	Staffa fissaggio motore/ *Support plate*	234512
9	Vite/ *Screw* M3x22 TCEI (4)	241012
10	Molla/ *Spring*	221061
11	Boccola/ Bush	234557
12	Magnete/ *Magnet* 10-15 H2	251152
13	Porta inserto - kit/ *Bit holderkit*	234559/KIT
14	Vite/ *Screw* M3x6 T10 (3)	801002
15	Cover PLUTO..PS	234554
16	Supporto sensore/ *Sensor support*	234553
17	Sensore/ *Sensor*	251153
18	Vite/ *Screw* 2,2x16 inox (4)	220059
19	Impugnatura sx / *Left housing*	220354/ESD
20	Interruttore reversibilità/ *Reverse switch*	200057
21	Connettore/ *Connector* M 5 pin	201666
	Cavo/ *Cable* 5 pin 2,5 mt.	200063

Vers. 190121

PL..D/TA
ESPLOSO/ *EXPLODED VIEW*

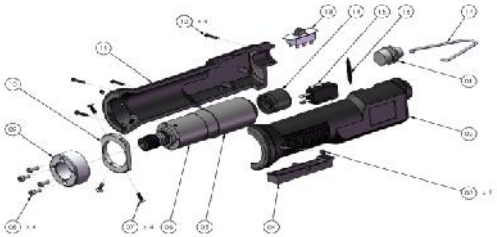

PARTI DI RICAMBIO/ *SPARE PARTS*

RIF	DESCRIZIONE/ *DESCRIPTION*	COD.
1	Connettore/ *Connector* M 8 pin	201766
2	Impugnatura dx/ *Right housing*	220354/ESD
3	Grano/ *Screw* M4x4 (2)	835014
4	Leva azionamento micro/ *Start lever*	221455/ESD
5	Motore/ *Motor* PL3	231509/3
	Motore/ *Motor* PL6	231509/6
	Motore/ *Motor* PL10	231509
	Motore/ *Motor* PL15	231509/15
6	Riduttore/ *Reduction gears* PL3	231510/3N
	Riduttore/ *Reduction gears* PL6	231510/6
	Riduttore/ *Reduction gears* PL10	231510/N
	Riduttore/ *Reduction gears* PL15	231510/15N
7	Vite/ *Screw* M3x10 TSP (4)	234513
8	Vite/ *Screw* 8.8M 3x18 (4)	231506
9	Anello di supporto/ *Support ring* KP05	234511/K
10	Staffa fissaggio motore/ *Support plate*	234512
11	Impugnatura sx / *Left housing*	220358/ESD
12	Vite/ *Screw* 2,2x16 inox (4)	220059
13	Interruttore reversibilità/ *Reverse switch*	200057
14	Encoder	234530
	Cavetti encoder (inclusi)/ *Cable for encoder (included)*	234530/F
15	Microswitch	201056
16	Molla/ *Spring*	219855
17	Gancio/ *Hook*	200060
	Cavo/ *Cable* 8 pin 2,5 mt.	250063/N

PL..P/TA
ESPLOSO/ *EXPLODED VIEW*

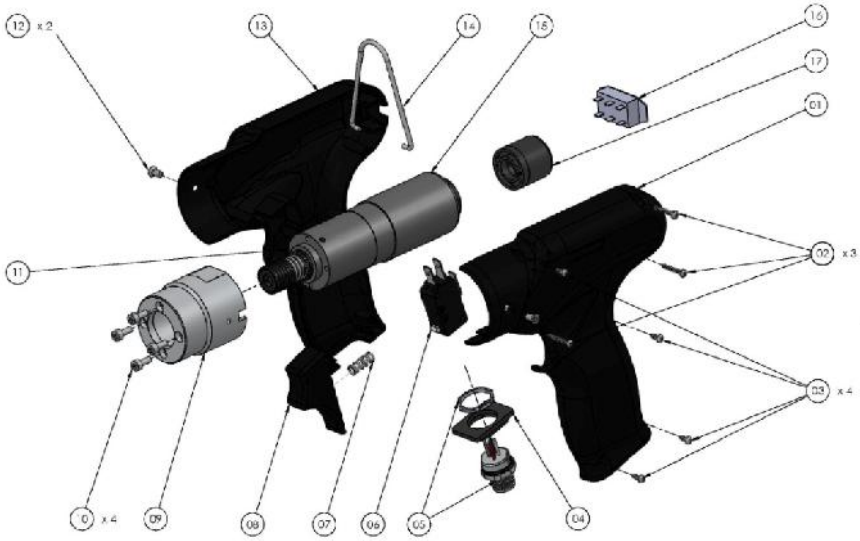

PARTI DI RICAMBIO/ *SPARE PARTS*

RIF	DESCRIZIONE/*DESCRIPTION*	COD.
1	Impugnatura dx/ *Right housing*	234501/ESD
2	Vite/ *Screw* 2,2x16 inox (3)	220059
3	Vite impugnatura/ *Screw* (4)	234504
4	Portaconnettore/ *Connector seat*	234506/ESD
5	Connettore/ *Connector* M 5 pin	231666
6	Micro interruttore/*Start switch*	201056
7	Molla tasto/ *Spring Lever*	221061
8	Tasto/ *Trigger*	234503/ESD
9	Portamotore/ *Motor cover*	234505
10	Vite a brugola/ *Screw* M3 x 8 (4)	231508/ZN
11	Riduttore/ *Reduction gears* PL3	231510/3N
	Riduttore/ *Reduction gears* PL6	231510/6N
	Riduttore/ *Reduction gears* PL10	231510/N
	Riduttore/ *Reduction gears* PL15	231510/15N
12	Vite/ *Screw* M3x5 inox (2)	801002
13	Impugnatura sx/ *Left housing*	234502/ESD
14	Gancio/ *Hook*	200060
15	Motore/ *Motor* PL3	231509/3
	Motore/ *Motor* PL6	231509/6
	Motore/ *Motor* PL10	231509
	Motore/ *Motor* PL15	231509/15
16	Interr. di reversibilità/ *Reverse switch*	200057
17	Encoder	234530/3
	Cavo/ *Cable* 8 pin 2,5 mt.	250063/N

PL..CA/TA
ESPLOSO/ *EXPLODED VIEW*

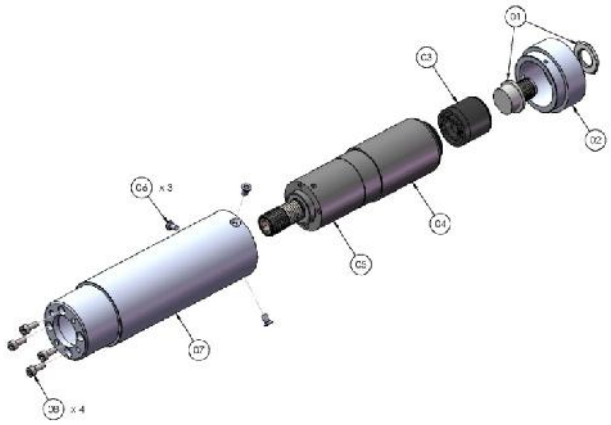

PARTI DI RICAMBIO/ *SPARE PARTS*

RIF	DESCRIZIONE/ *DESCRIPTION*	COD.
1	Connettore/ *Connector* M 8 pin	201766
2	Coperchio/ *Cap*	800311
3	Encoder	234530/3
	Cavetti/ *Wires Encoder*	234530/F
	Staffa/ *Encoder clamp*	244530/S
4	Motore/ *Motor* PL3	231509/3M
	Motore/ *Motor* PL6	231509/6M
	Motore/ *Motor* PL10	231509/10M
	Motore/ *Motor* PL15	231509/15M
5	Riduttore/ *Reduction gears* PL3	231510/3M
	Riduttore/ *Reduction gears* PL6	231510/6M
	Riduttore/ *Reduction gears* PL10	231510/M
	Riduttore/ *Reduction gears* PL15	231510/15M
6	Vite/ *Screw* M3x6 (3)	801002
7	Cannotto alluminio/ *Aluminium body*	234510
8	Vite/ *Screw* M3x6 (4)	231504/ZN
	Cavo/ *Cable* 8 pin 2,5 mt.	250063/N

ALTRI INGOMBRI/ *OTHER DRAWINGS*

PLUTO3-6-8ANG:

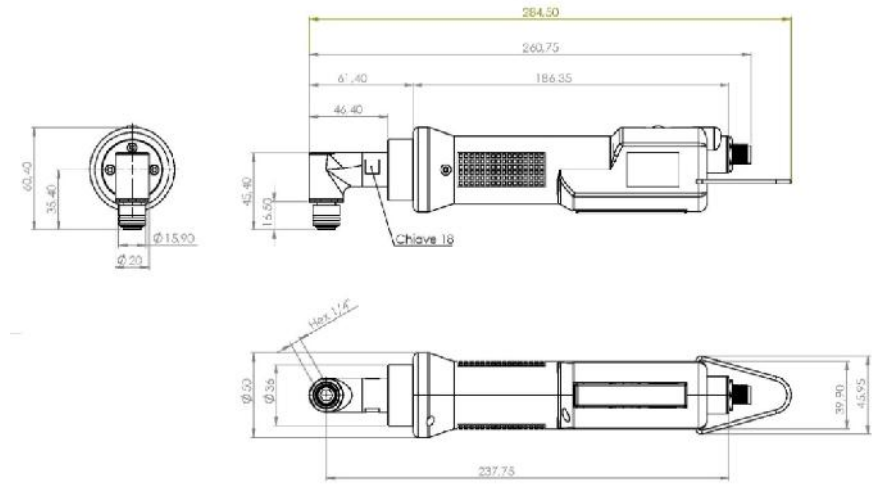

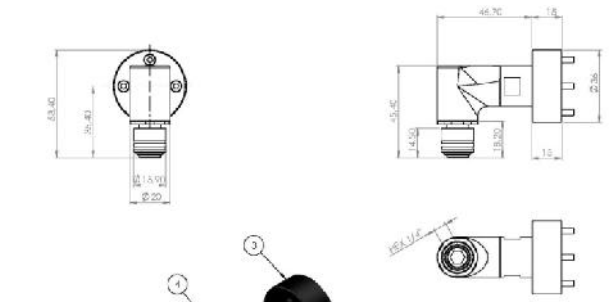

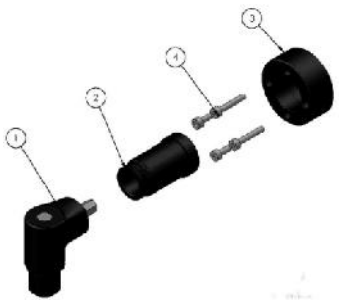

Num. articolo	Descrizione	Codice	Quantità
1	Testina CP 234521	234521	1
2	KP07 Raccordo testa 90° Pluto 234516	234516	1
3	KP08 Anello fissaggio testa 90° Pluto Cod. 234517	234517	1
4	BN3 VITE TESTA TCEI 8.8 M3X18 KP05	231506	4

PLUTO15ANG:

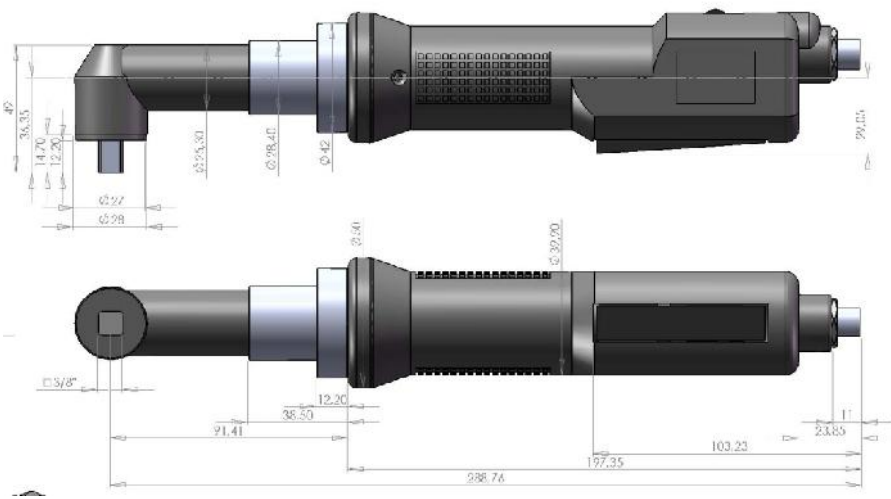

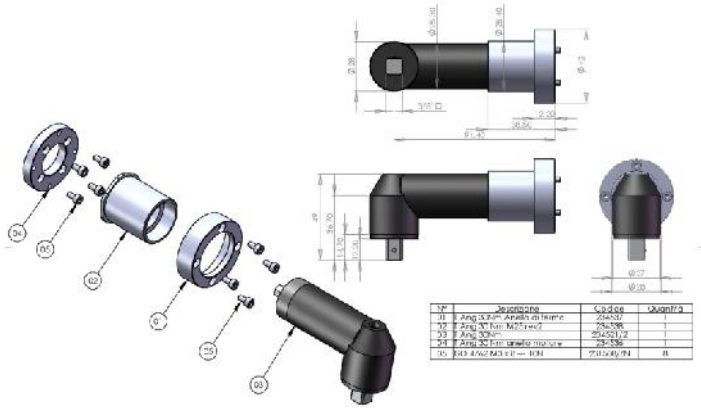

N°	Descrizione	Codice	Quantità
01	Ang 30 Nm Anello di fermo	234537	1
02	Ang 30 Nm M25 rev2	234538	1
03	Ang 30Nm	234521/2	1
04	Ang 30 Nm anello mobile	234536	1
05	RD 4/62 M3 x 8 — 10N	231506/PN	8

PLUTO20ANG/SR:

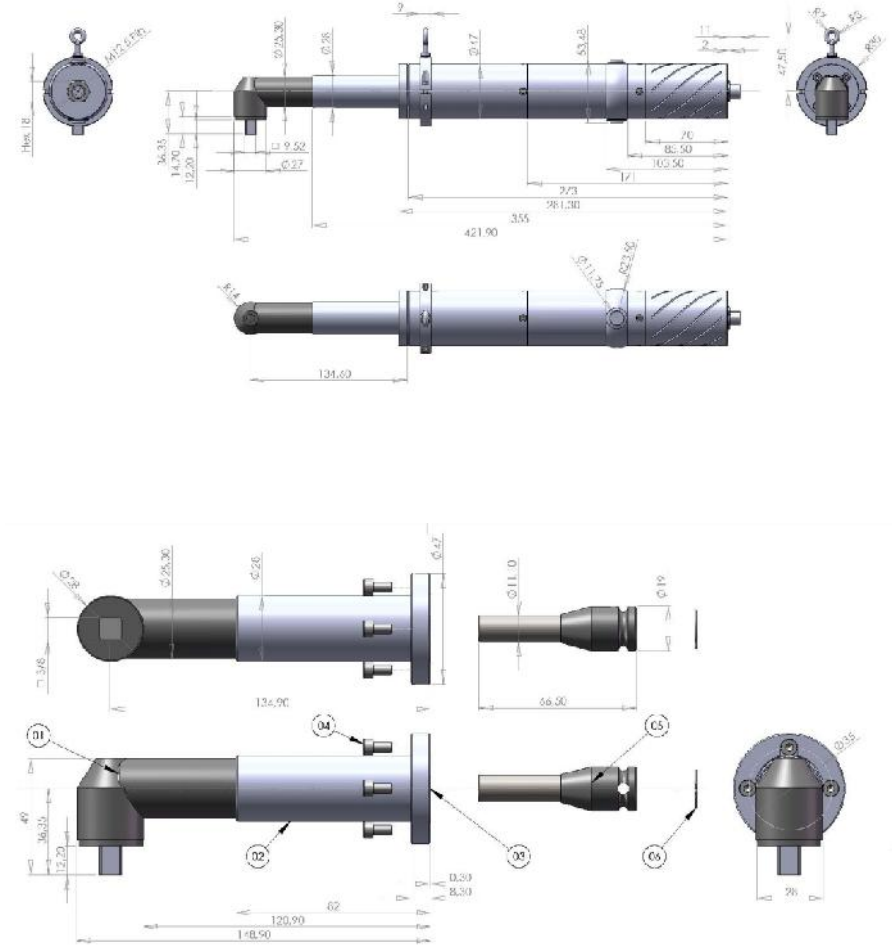

Num. articolo	Descrizione	Codice	Quantità
01	T Ang 30Nm	234521/2	1
02	T Ang 30Nm PL20	234543	1
03	T Ang 30Nm Anello di fermo PL20 REV1	234542	1
04	BN3 vite M4 x 12 cannello Pluto20	231507	4
05	95-2-M Bussola porta inserti magnete	FE-95-2M	1
06	Molla di sicurezza per bussole	FE-130TC	1

PLUTO30ANG:

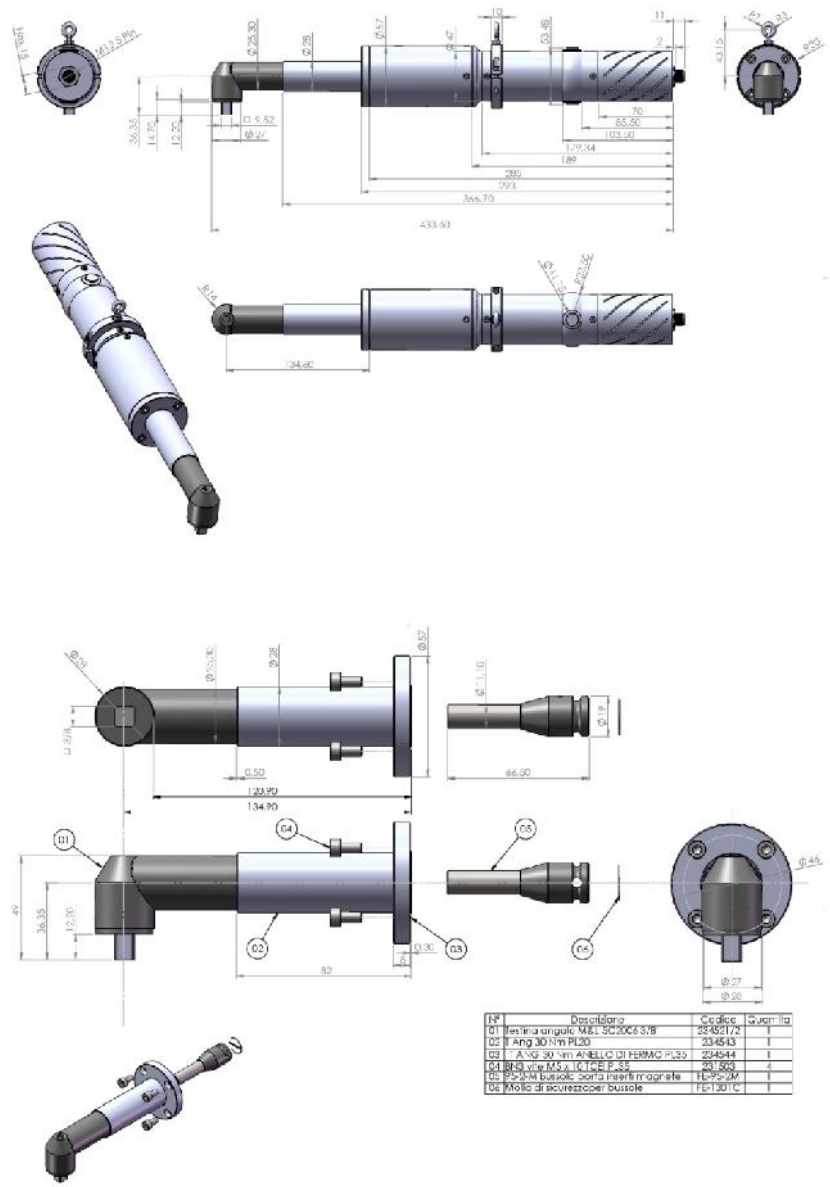

N°	Descrizione	Codice	Quantità
01	Testina angolo M&L SC2006 3/8	234521/2	1
02	T Ang 30 Nm PL20	234543	1
03	T ANG 30 Nm ANELLO DI FERMO PL35	234544	1
04	BN3 vite M5 x 10 TCEI P.35	231503	4
05	95-2-M bussola porta inserti magnete	FE-95-2M	1
06	Molla di sicurezza per bussole	FE-130TC	1

Vers. 190121

DICHIARAZIONE DI CONFORMITA'

CE

KOLVER S.r.l.
VIA MARCO CORNER, 19/21
36016 THIENE (VI) ITALIA

Dichiara che la macchina nuova qui descritta/ *Declare that the new screwdriver here described*: Avvitatore elettrico / *Electric screwdriver*:

MITO SERIE/ *SERIES*

È conforme alle disposizioni legislative che traspongono le direttive e le normative/ *Is in conformity with the following standards and other normative documents*: 2006/42/CE, LVD 2014/35/UE, EMCD 2014/30/UE, EN 62841-2-2:2014, EN 62841-1: 2015, EN 60204-1, EN 61000-6-2, EN 61000-6-4.
È conforme alla direttiva RoHS III (2011/65/UE e successiva 2015/863)/
It is also in conformity with RoHS III normative (2011/65/UE and following 2015/863).

Nome/*Name*: Giovanni Colasante
Posizione/*Position*: Amministratore Delegato/*General Manager*
Persona incaricata a costituire il fascicolo tecnico presso la Sede/ *Person authorized to compile the technical file in Kolver*

Thiene, 1° gennaio 2021 *Giovanni Colasante*

Vers. 160920

Manuale Istruzioni/ *Operator's Handbook*

MITO

Avvitatori/ *Screwdrivers*

KOLVER S.r.l.
VIA MARCO CORNER, 19/21
36016 THIENE (VI) ITALIA
TEL +39 0445 371068
www.kolver.it

Vers. 160920

IT

Modello	Coppia Nm	Velocità RPM	
		Min	Max
MITO15	0,35-1,5	450	850

ATTENZIONE: Prima di qualsiasi utilizzo o intervento sull'avvitatore, verificate che le informazioni che seguono e le istruzioni contenute nella guida di sicurezza (Codice articolo: 0MS000) siano state lette, comprese e rispettate. Le caratteristiche e le descrizioni dei nostri prodotti sono soggette a cambiamenti senza preavviso da parte nostra.

DICHIARAZIONE DI UTILIZZO
Avvitatore (classe I) adeguato solamente all'ambiente di natura industriale. Deve essere utilizzato solo per il serraggio. Non è permesso nessun altro utilizzo. Riservato ad un uso professionale.

DATI
Livello di rumore: <70 dB (A)
Livello di vibrazione: <2,5 m/s²

Livello di rumore ed emissione di vibrazioni dichiarati
Questi valori sono misurati da un laboratorio di collaudo in conformità alle norme in vigore, ma in nessun caso possono essere utilizzati per la valutazione dei rischi. I valori risultanti durante l'utilizzo possono essere più elevati dei valori dichiarati. I valori reali di esposizione ed i danni fisici risultanti dall'esposizione alle vibrazioni sono specifici e dipendono dal modo in cui l'utente lavora, dal pezzo lavorato e dalla sua forma, come anche dal tempo di esposizione e dalle capacità fisiche dell'utente. KOLVER non può essere tenuta responsabile dei danni causati dai livelli reali più elevati rispetto a quelli dichiarati, non avendo essa stessa nessun controllo sull'utilizzazione delle macchine.

MODO D'USO
L'avvitatore può essere manuale oppure come mandrino fisso su una macchina.

IMPORTANTE: E' sconsigliato l'uso continuo oltre l'80% del campo di coppia!

Uso manuale

- Inserire nell'avvitatore un accessorio di avvitatura appropriato e collegarlo all'unità di controllo.
- Tenere l'avvitatore dall'impugnatura e posizionarlo sul dispositivo di fissaggio da stringere.
- Selezionare i parametri desiderati dall'unità di controllo.
- Premere la leva interruttore per avviare l'avvitatore.
- L' avvitatore si ferma quando viene raggiunta la coppia programmata.
- Ogni utilizzo deve essere seguito da un tempo di riposo uguale a tre volte la durata d'utilizzo (1s/3s)
- L'inosservanza di questa istruzione può causare un surriscaldamento del motore o un guasto.
- In questo caso la garanzia non verrà applicata.

Per avviare l'avvitatore, premere sulla leva. Poiché la forza di reazione aumenta proporzionalmente alla coppia di serraggio, accertatevi che l'avvitatore sia in perfetto stato di funzionamento e che l'unità di controllo sia programmata correttamente, per ridurre il rischio di lesioni per l'operatore a seguito di un comportamento imprevisto dell'avvitatore.

Controllo e software

Alimentazione tramite unità di controllo serie EDU2AE, EDU2AE/HP, EDU2AE/HPro e EDU2AE/TOP.

LUBRIFICAZIONE

Non mettere troppo grasso sugli ingranaggi o sui cuscinetti; basta un leggero strato. Lubrificare dopo 300.000 cicli.

ISTRUZIONI PER LA MANUTENZIONE

La manutenzione deve essere effettuata soltanto da personale qualificato.

- Prima di qualsiasi operazione di manutenzione: scollegare l'avvitatore.
- Durante lo smontaggio-rimontaggio dell'avvitatore, prendere le seguenti precauzioni:
  - Verificare che l'unità di controllo sia spenta.
  - Scollegare il cavo.

Per l'eliminazione dei componenti, dei lubrificanti, etc., accertatevi che siano rispettate le procedure di sicurezza. Conformemente alla Direttiva 2002/96/CE relativa ai rifiuti di apparecchiature elettriche ed elettroniche (WEEE). Questo prodotto deve essere riciclato.

GARANZIA

1. Questo prodotto è garantito da difetti di lavorazione o di materiali per un periodo massimo di 12 mesi a partire dalla data di acquisto presso KOLVER, sempre che il suo impiego sia stato limitato ad un unico turno per tutto quel periodo. Se il ritmo d'impiego supera il funzionamento di un unico turno, la durata della garanzia sarà ridotta in modo proporzionale.
2. Se il prodotto presenta difetti di fabbricazione o di materiali, durante il periodo della garanzia, deve essere restituito a KOLVER, trasporto prepagato, unitamente ad una breve descrizione del presunto difetto. KOLVER deciderà, a sua discrezione, se dar disposizioni per la riparazione o la sostituzione gratuita dei componenti che ritiene essere difettosi, a causa della fabbricazione o dei materiali.
3. Questa garanzia non è valida per quei prodotti che sono stati usati in modo non-conforme, o modificati, o che non sono stati riparati da KOLVER, o perché sono stati utilizzati ricambi non originali KOLVER, o perché riparati da persone non autorizzate da KOLVER.
4. KOLVER non accetta nessuna richiesta di risarcimento per spese di manodopera o di altro tipo causate da prodotti difettosi.
5. Si escludono espressamente danni diretti, incidentali o indiretti di qualsiasi tipo, dovuti a qualsiasi difetto.
6. Questa garanzia sostituisce ogni altra garanzia o condizione, espressa o implicita, riguardante la qualità, la commerciabilità o l'idoneità a qualsiasi scopo particolare.
7. Nessuno, neppure i rappresentanti, dipendenti o impiegati KOLVER, è autorizzato ad ampliare o modificare, in qualsiasi modo, i termini di questa garanzia limitata. E' comunque possibile estendere la garanzia dietro pagamento di un correspettivo. Ulteriori informazioni contattando kolver@kolver.it

EN

Model	Torque Nm	Speed RPM	
		Min	Max
MITO15	0,35-1,5	450	850

WARNING: To reduce the risk of injury, before using or servicing screwdriver, read and understand the following information as well as separately provided safety instructions (item code: 0MS000). The features and descriptions of our products are subject to change without prior notice.

DECLARATION OF USE
Screwdriver (class I) suitable for industrial environment only. It shall be used for tightening. No other use will be permitted. For professional use only.

DATA
Noise level: < 70 dB(A)
Vibration level: < 2.5 m/s²

Declaration of noise and vibration emission
These declared values were obtained by laboratory type testing in compliance with the stated standards and are not adequate for use in risk assessments. Values measured in individual work places may be higher than the declared values. The actual exposure values and risk of harm experienced by an individual user are unique and depend upon the way the user works, the work piece and the workstation design, as well as upon the exposure time and the physical condition of the user. We, KOLVER, cannot be held liable for the consequences of using the declared values, instead of values reflecting the actual exposure, in an individual risk assessment in a work place situation over which we have no control.

OPERATING MODE
The screwdriver can be manual or used as fixed spindle on an automatic machine.

IMPORTANT: Continuous use over 80% of torque range is not recommend!

Manual screwdriver

- Fit the screwdriver with a suitable fastening accessory, then connect it to the control unit.
- Hold the screwdriver by the handle and apply to the fastener to be tightened.
- Select the desired parameters through the control unit.
- Press the lever to start the screwdriver.
- The screwdriver stops when the preset torque is reached.
- For each second of operation, the motor needs to rest for 3 seconds.
- Failure to do so may result in motor overheating and damage.
- That will be considered as a misuse and the warranty will not be applied.

As the reaction increases in proportion to the tightening torque, make sure that the screwdriver is in perfect working and the control unit is programmed correctly, to reduce the risk of injury to the operator as a result of unexpected behaviour of the screwdriver.

Control and software

Power source by EDU2AE, EDU2AE/HP, EDU2AE/HPro e EDU2AE/TOP series.

LUBRICATION

Do not grease too much gears or bearings; a thin coat shall be sufficient.
Grease after 300.000 cycles.

MAINTENANCE INSTRUCTIONS

Maintenance should be performed by qualified personnel only.

- Prior to any maintenance task: disconnect the screwdriver.
- When disassembling / reassembling the screwdriver, take the following precautions:
    - Check that the controller is switched off.
    - Disconnect the cable.

According to Directive 2002/96/CE concerning Waste Electrical and Electronic Equipment (WEEE), this product must be recycled.

GUARANTEE

1. This KOLVER product is guaranteed against defective workmanship or materials, for a maximum period of 12 months following the date of purchase from KOLVER, provided that its usage is limited to single shift operation throughout that period. If the usage rate exceeds of single shift operation, the guarantee period shall be reduced on a prorata basis.
2. If, during the guarantee period, the product appears to be defective in workmanship or materials, it should be returned to KOLVER or its distributors, transport prepaied, together with a short description of the alleged defect. KOLVER shall, at its sole discretion, arrange to repair or replace free of charge such items.
3. This guarantee does not cover repair or replacement required as a consequence of products which have been abused, misused or modified, or which have been repaired using not original KOLVER spare parts or by not authorized service personnel.
4. KOLVER accepts no claim for labour or other expenditure made upon defective products.
5. Any direct, incidental or consequential damages whatsoever arising from any defect are expressly excluded.
6. This guarantee replaces all other guarantees, or conditions, expressed or implied, regarding the quality, the marketability or the fitness for any particular purpose.
7. No one, whether an agent, servant or employee of KOLVER, is authorized to add to or modify the terms of this limited guarantee in any way. However it's possible to extend the warranty with an extra cost. Further information at kolver@kolver.it

MITO15D: ESPLOSO/ *EXPLODED V*

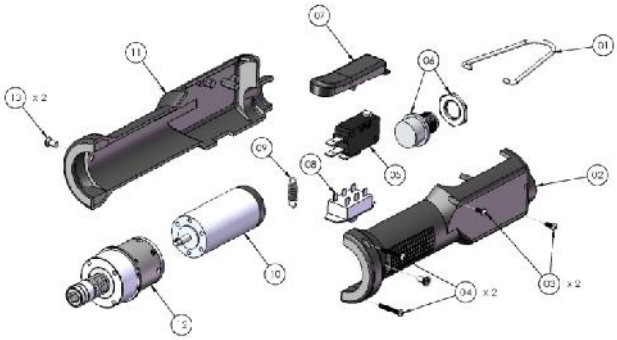

PARTI DI RICAMBIO/ *SPARE PARTS*

RIF	DESCRIZIONE/ *DESCRIPTION*	COD.
1	Gancio/ *Hook*	200060
2	Impugnatura dx/ *Right housing*	210158/ESD
3	Vite/ *Screw* 2.2x13 (2)	210059
4	Vite/ *Screw* 2.2x16 (2)	220059
5	Microswitch	201056
6	Connettore/ *Connector* M 5 pin	201666
7	Leva azionamento micro/ *Start lever*	211255/ESD
8	Interruttore reversibilità/ *Reverse switch*	200057
9	Molla leva/ *Spring lever*	211061
10	Motore/ *Motor*	231509/2
11	Impugnatura sx/ *Left housing*	210154/ESD
12	Riduttore/ *Reduction gears*	250040
13	Vite/ *Screw* M3x6 TX (4)	801002
	Cavo/ *Cable* 5 pin 2,5 mt.	200063

MITO15P: ESPLOSO/ *EXPLODED VIEW*

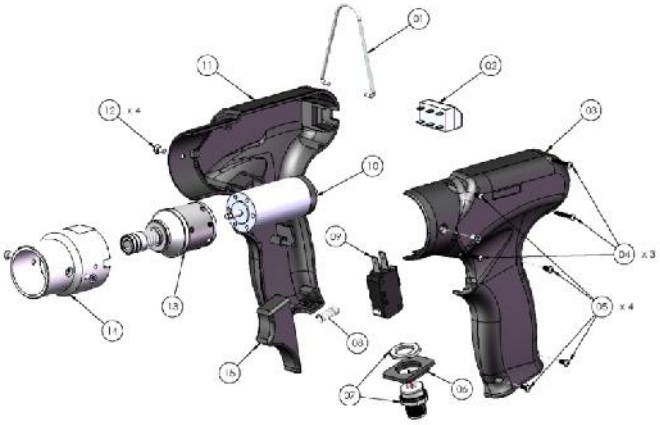

PARTI DI RICAMBIO/ *SPARE PARTS*

RIF	DESCRIZIONE/ *DESCRIPTION*	COD.
1	Gancio/ *Hook*	200060
2	Interruttore reversibilità/ *Reverse switch*	200057
3	Impugnatura dx/ *Right housing*	234501/ESD
4	Vite/ *Screw* 2.2x16 (3)	220059
5	Vite/ *Screw* 2.2x9.5 (4)	234504
6	Porta connettore/ *Connector seat*	234506/ESD
7	Connettore/ *Connector* M 5 pin	231666
8	Molla leva/ *Spring lever*	221061
9	Microswitch	201056
10	Motore/ *Motor*	231509/2
11	Impugnatura sx/ *Left housing*	234502/ESD
12	Vite/ *Screw* M3x6 TX (4)	801002
13	Riduttore/ *Reduction gears*	250040
14	Porta motore/ *Motor seat*	250002
	Cavo/ *Cable* 5 pin 2,5 mt.	200063

MITO15CA: ESPLOSO/ *EXPLODED VIEW*

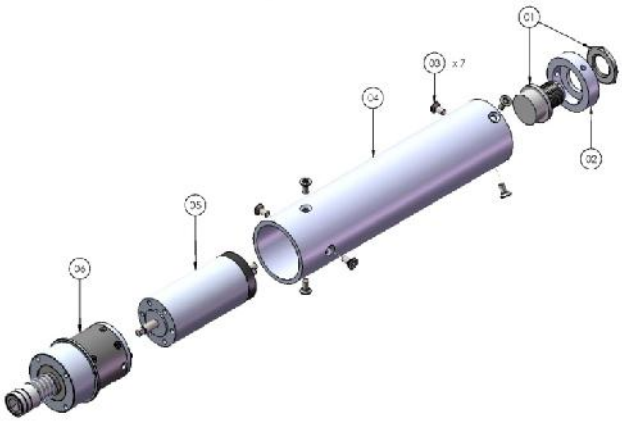

PARTI DI RICAMBIO/ *SPARE PARTS*

RIF	DESCRIZIONE/ *DESCRIPTION*	COD.
1	Connettore/ *Connector* M 5 pin	201666
2	Coperchio cannotto/ *Cup*	250001
3	Vite/ *Screw* M3x6 TX (7)	801002
4	Cannotto/ *Aluminium body*	250000
5	Motore/ *Motor*	231509/2
6	Riduttore/ *Reduction gears*	250040
	Cavo/ *Cable* 5 pin 2,5 mt.	200063

INGOMBRI/ *DIMENSIONAL DRAWINGS*:

MITO15D

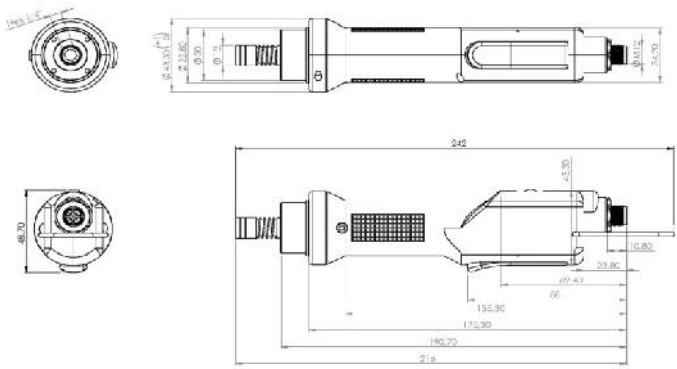

MITO15P

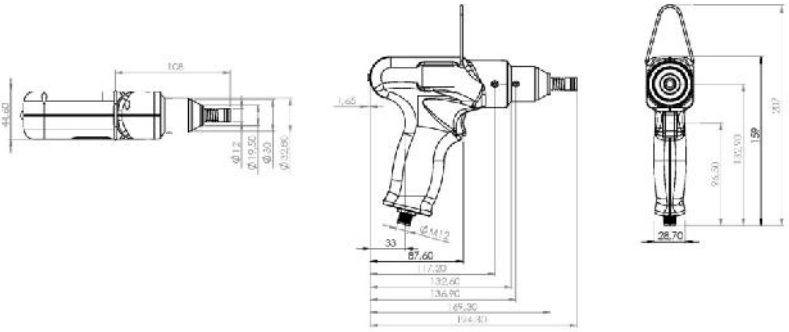

MITO15CA

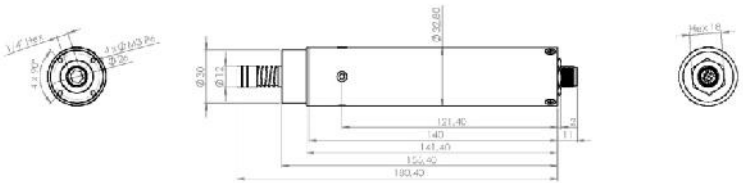

DICHIARAZIONE DI CONFORMITA'

CE

KOLVER S.r.l.
VIA MARCO CORNER, 19/21
36016 THIENE (VI) ITALIA

Dichiara che la macchina nuova qui descritta/ *Declare that the new screwdriver here described*: Avvitatore elettrico / *Electric screwdriver*:

NATO SERIE/ *SERIES*

È conforme alle disposizioni legislative che traspongono le direttive e le normative/ *Is in conformity with the following standards and other normative documents*: 2006/42/CE, LVD 2014/35/UE, EMCD 2014/30/UE, EN 62841-2-2:2014, EN 62841-1: 2015, EN 60204-1, EN 61000-6-2, EN 61000-6-4.
È conforme alla direttiva RoHS III (2011/65/UE e successiva 2015/863)/ *It is also in conformity with RoHS III normative (2011/65/UE and following 2015/863).*

Nome/*Name*: Giovanni Colasante
Posizione/*Position*: Amministratore Delegato/*General Manager*
Persona incaricata a costituire il fascicolo tecnico presso la Sede/ *Person authorized to compile the technical file in Kolver*

Thiene, 1° gennaio 2021 *Giovanni Colasante*

Vers. 160920

Manuale Istruzioni/
Operator's Handbook

NATO

Avvitatori/ *Screwdrivers*

KOLVER S.r.l.
VIA MARCO CORNER, 19/21
36016 THIENE (VI) ITALIA
TEL +39 0445 371068
www.kolver.it

Vers. 160920

IT

Modello	Coppia cNm	Velocità RPM	
		Min	Max
NATO15	1.5-25	100	700
NATO50	5-50	50	700

ATTENZIONE: Prima di qualsiasi utilizzo o intervento sull'avvitatore, verificate che le informazioni che seguono e le istruzioni contenute nella guida di sicurezza (Codice articolo: 0MS000) siano state lette, comprese e rispettate. Le caratteristiche e le descrizioni dei nostri prodotti sono soggette a cambiamenti senza preavviso da parte nostra.

DICHIARAZIONE DI UTILIZZO
Avvitatore (classe I) adeguato solamente all'ambiente di natura industriale. Deve essere utilizzato solo per il serraggio. Non è permesso nessun altro utilizzo. Riservato ad un uso professionale.

DATI
Livello di rumore: <70 dB (A)
Livello di vibrazione: <2,5 m/s²

Livello di rumore ed emissione di vibrazioni dichiarati
Questi valori sono misurati da un laboratorio di collaudo in conformità alle norme in vigore, ma in nessun caso possono essere utilizzati per la valutazione dei rischi. I valori risultanti durante l'utilizzo possono essere più elevati dei valori dichiarati. I valori reali di esposizione ed i danni fisici risultanti dall'esposizione alle vibrazioni sono specifici e dipendono dal modo in cui l'utente lavora, dal pezzo lavorato e dalla sua forma, come anche dal tempo di esposizione e dalle capacità fisiche dell'utente. KOLVER non può essere tenuta responsabile dei danni causati dai

livelli reali più elevati rispetto a quelli dichiarati, non avendo essa stessa nessun controllo sull'utilizzazione delle macchine.

MODO D'USO
L'avvitatore può essere manuale oppure come mandrino fisso su una macchina.

IMPORTANTE: E' sconsigliato l'uso continuo oltre l'80% del campo di coppia!

Uso manuale

- Inserire nell'avvitatore un accessorio di avvitatura appropriato e collegarlo all'unità di controllo.
- Tenere l'avvitatore dall'impugnatura e posizionarlo sul dispositivo di fissaggio da stringere.
- Selezionare i parametri desiderati dall'unità di controllo.
- Premere la leva interruttore per avviare l'avvitatore.
- L' avvitatore si ferma quando viene raggiunta la coppia programmata.
- Ogni utilizzo deve essere seguito da un tempo di riposo uguale a tre volte la durata d'utilizzo (1s/3s)
- L'inosservanza di questa istruzione può causare un surriscaldamento del motore o un guasto.
- In questo caso la garanzia non verrà applicata.

Per avviare l'avvitatore, premere sulla leva. Poiché la forza di reazione aumenta proporzionalmente alla coppia di serraggio, accertatevi che l'avvitatore sia in perfetto stato di funzionamento e che l'unità di controllo sia programmata correttamente, per ridurre il rischio di lesioni per l'operatore a seguito di un comportamento imprevisto dell'avvitatore.

Controllo e software
Alimentazione tramite unità di controllo serie EDU2AE/TOP/NT.

LUBRIFICAZIONE
Non mettere troppo grasso sugli ingranaggi o sui cuscinetti; basta un leggero strato. Lubrificare dopo 300.000 cicli.

ISTRUZIONI PER LA MANUTENZIONE
La manutenzione deve essere effettuata soltanto da personale qualificato.

- Prima di qualsiasi operazione di manutenzione: scollegare l'avvitatore.
- Durante lo smontaggio-rimontaggio dell'avvitatore, prendere le seguenti precauzioni:
  - Verificare che l'unità di controllo sia spenta.
  - Scollegare il cavo.

Per l'eliminazione dei componenti, dei lubrificanti, etc., accertatevi che siano rispettate le procedure di sicurezza. Conformemente alla Direttiva 2002/96/CE relativa ai rifiuti di apparecchiature elettriche ed elettroniche (WEEE). Questo prodotto deve essere riciclato.

GARANZIA

1. Questo prodotto è garantito da difetti di lavorazione o di materiali per un periodo massimo di 12 mesi a partire dalla data di acquisto presso KOLVER, sempre che il suo impiego sia stato limitato ad un unico turno per tutto quel periodo. Se il ritmo d'impiego supera il funzionamento di un unico turno, la durata della garanzia sarà ridotta in modo proporzionale.
2. Se il prodotto presenta difetti di fabbricazione o di materiali, durante il periodo della garanzia, deve essere restituito a KOLVER, trasporto prepagato, unitamente ad una breve descrizione del presunto difetto. KOLVER deciderà, a sua discrezione, se dar disposizioni per la riparazione o la sostituzione gratuita dei componenti che ritiene essere difettosi, a causa della fabbricazione o dei materiali.
3. Questa garanzia non è valida per quei prodotti che sono stati usati in modo non-conforme, o modificati, o che non sono stati riparati da KOLVER, o perché sono stati utilizzati ricambi non originali KOLVER, o perché riparati da persone non autorizzate da KOLVER.
4. KOLVER non accetta nessuna richiesta di risarcimento per spese di manodopera o di altro tipo causate da prodotti difettosi.
5. Si escludono espressamente danni diretti, incidentali o indiretti di qualsiasi tipo, dovuti a qualsiasi difetto.
6. Questa garanzia sostituisce ogni altra garanzia o condizione, espressa o implicita, riguardante la qualità, la commerciabilità o l'idoneità a qualsiasi scopo particolare.
7. Nessuno, neppure i rappresentanti, dipendenti o impiegati KOLVER, è autorizzato ad ampliare o modificare, in qualsiasi modo, i termini di questa garanzia limitata. E' comunque possibile estendere la garanzia dietro pagamento di un correspettivo. Ulteriori informazioni contattando kolver@kolver.it

Vers. 160920

EN

Model	Torque cNm	Speed RPM	
		Min	Max
NATO15	1.5-25	100	700
NATO50	5-50	50	700

WARNING: To reduce the risk of injury, before using or servicing screwdriver, read and understand the following information as well as separately provided safety instructions (item code: 0MS000). The features and descriptions of our products are subject to change without prior notice.

DECLARATION OF USE
Screwdriver (class I) suitable for industrial environment only. It shall be used for tightening. No other use will be permitted. For professional use only.

DATA
Noise level: < 70 dB(A)
Vibration level: < 2.5 m/s^2

Declaration of noise and vibration emission
These declared values were obtained by laboratory type testing in compliance with the stated standards and are not adequate for use in risk assessments. Values measured in individual work places may be higher than the declared values. The actual exposure values and risk of harm experienced by an individual user are unique and depend upon the way the user works, the work piece and the workstation design, as well as upon the exposure time and the physical condition of the user. We, KOLVER, cannot be held liable for the consequences of using the declared values, instead of values reflecting the actual exposure, in an individual risk assessment in a work place situation over which we have no control.

OPERATING MODE
The screwdriver can be manual or used as fixed spindle on an automatic machine.

IMPORTANT: Continuous use over 80% of torque range is not recommend!

Vers. 160920

Manual screwdriver

- Fit the screwdriver with a suitable fastening accessory, then connect it to the control unit.
- Hold the screwdriver by the handle and apply to the fastener to be tightened.
- Select the desired parameters through the control unit.
- Press the lever to start the screwdriver.
- The screwdriver stops when the preset torque is reached.
- For each second of operation, the motor needs to rest for 3 seconds.
- Failure to do so may result in motor overheating and damage.
- That will be considered as a misuse and the warranty will not be applied.

As the reaction increases in proportion to the tightening torque, make sure that the screwdriver is in perfect working and the control unit is programmed correctly, to reduce the risk of injury to the operator as a result of unexpected behaviour of the screwdriver.

Control and software

Power source by EDU2AE/TOP/NT series.

LUBRICATION

Do not grease too much gears or bearings; a thin coat shall be sufficient.
Grease after 300.000 cycles.

MAINTENANCE INSTRUCTIONS

Maintenance should be performed by qualified personnel only.

- Prior to any maintenance task: disconnect the screwdriver.
- When disassembling / reassembling the screwdriver, take the following precautions:
    - Check that the controller is switched off.
    - Disconnect the cable.

According to Directive 2002/96/CE concerning Waste Electrical and Electronic Equipment (WEEE), this product must be recycled.

GUARANTEE

1. This KOLVER product is guaranteed against defective workmanship or materials, for a maximum period of 12 months following the date of purchase from KOLVER, provided that its usage is limited to single shift operation throughout that period. If the usage rate exceeds of single shift operation, the guarantee period shall be reduced on a prorata basis.
2. If, during the guarantee period, the product appears to be defective in workmanship or materials, it should be returned to KOLVER or its distributors, transport prepaied, together with a short description of the alleged defect. KOLVER shall, at its sole discretion, arrange to repair or replace free of charge such items.
3. This guarantee does not cover repair or replacement required as a consequence of products which have been abused, misused or modified, or which have been repaired using not original KOLVER spare parts or by not authorized service personnel.
4. KOLVER accepts no claim for labour or other expenditure made upon defective products.
5. Any direct, incidental or consequential damages whatsoever arising from any defect are expressly excluded.
6. This guarantee replaces all other guarantees, or conditions, expressed or implied, regarding the quality, the marketability or the fitness for any particular purpose.
7. No one, whether an agent, servant or employee of KOLVER, is authorized to add to or modify the terms of this limited guarantee in any way. However it's possible to extend the warranty with an extra cost. Further information at kolver@kolver.it

NATO15D/TA: ESPLOSO/ *EXPLODED VIEW* + INGOMBRO/ *DRAWING*

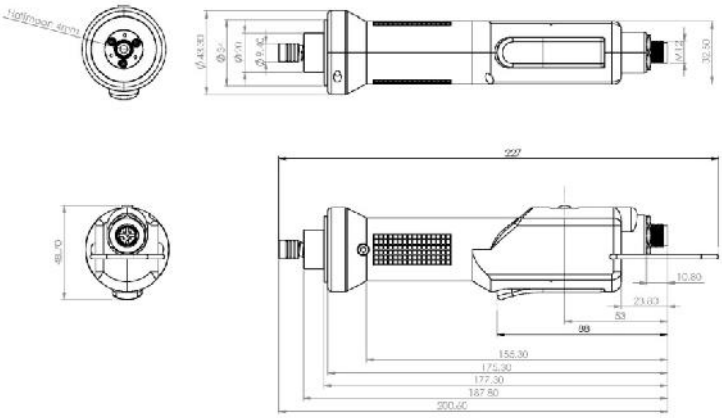

Vers. 160920

PARTI DI RICAMBIO/ *SPARE PARTS*

RIF	DESCRIZIONE/ *DESCRIPTION*	COD.
1	Gancio/ *Hook*	200060
2	Connettore/ *Connector* M 8 pin	201766
3	Impugnatura dx/ *Right housing*	210158/ESD
4	Leva azionamento micro/ *Start lever*	211255/ESD
5	Vite/*Screw* M3x6 (2)	801002
6	Encoder	250041
7	Motoriduttore/ *Motor+reduction gears*	231409
8	Flangia/ *Flange*	200034
9	Cuscinetto/ *Bearing* (2)	202073
10	Spina/*Spine* 1,5x6 (2)	250038
11	Flangia/ *Flange*	250032
12	Molla/ *Spring*	250036
13	Anello ferma sfera/ *Stop ring*	250035
14	Anello/ *Circlip*	250037
15	Vite/ *Screw* M3x12 (3)	250039
16	Sfera/ *Ball* 2mm (2)	200011
17	Mandrino/ *Spindle*	250033
18	Vite/*Screw* M2x6 (3)	872476
19	Vite/*Screw* 2,2x13 (4)	210059
20	Impugnatura sx / *Left housing*	210154/ESD
21	Interruttore reversibilità/ *Reverse switch*	200057
22	Molla leva/ *Lever spring*	211061
23	Microswitch	201056
	Cavo/ *Cable* 8 pin 2,5 mt.	250063/N

Vers. 160920

NATO15CA/TA: ESPLOSO/ *EXPLODED VIEW*+ INGOMBRO/ *DRAWING*

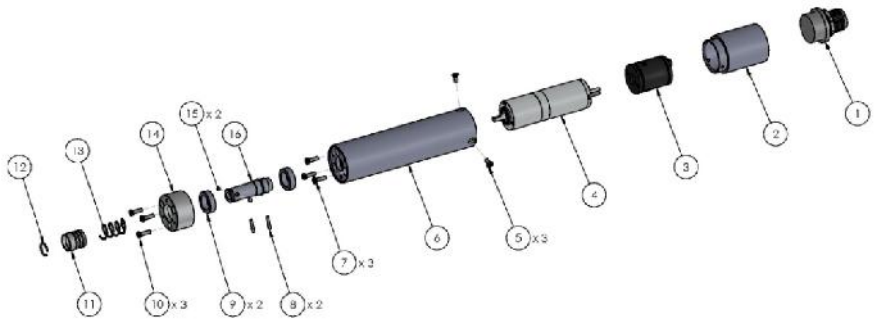

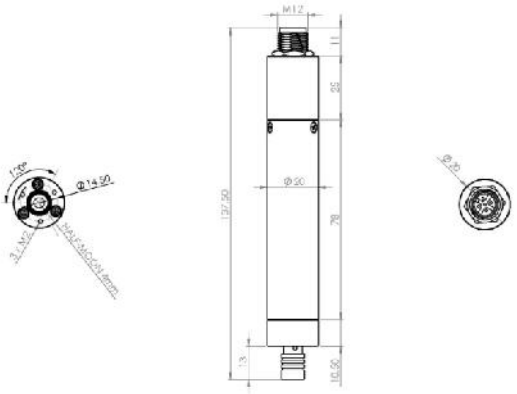

Vers. 160920

PARTI DI RICAMBIO/ *SPARE PARTS*

RIF	DESCRIZIONE/ *DESCRIPTION*	COD.
1	Connettore/ *Connector* M 5 pin	201766
2	Coperchio/ *Cup*	250030
3	Encoder	250041
4	Motoriduttore/ *Motor+reduction gears*	231409
5	Vite/ *Screw* M2x4 TX6 (5)	231531
6	Cannotto/ *Aluminium body*	250031
7	Vite/ *Screw* M2x6 (3)	872476
8	Spina/*Spine* 1,5x6 (2)	250038
9	Cuscinetto/ *Bearing* (2)	202073
10	Vite/ *Screw* M3x12 (3)	250039
11	Anello ferma sfera/ *Stop ring*	250035
12	Anello/ *Circlip*	250037
13	Molla/ *Spring*	250036
14	Flangia/ *Flange*	250032
15	Sfera/ *Ball* 2mm (2)	200011
16	Mandrino/ *Spindle*	250033
	Cavo/ *Cable* 8 pin 2,5 mt.	250063/N

NATO50D/TA: ESPLOSO/ *EXPLODED VIEW* + INGOMBRO/ *DRAWING*

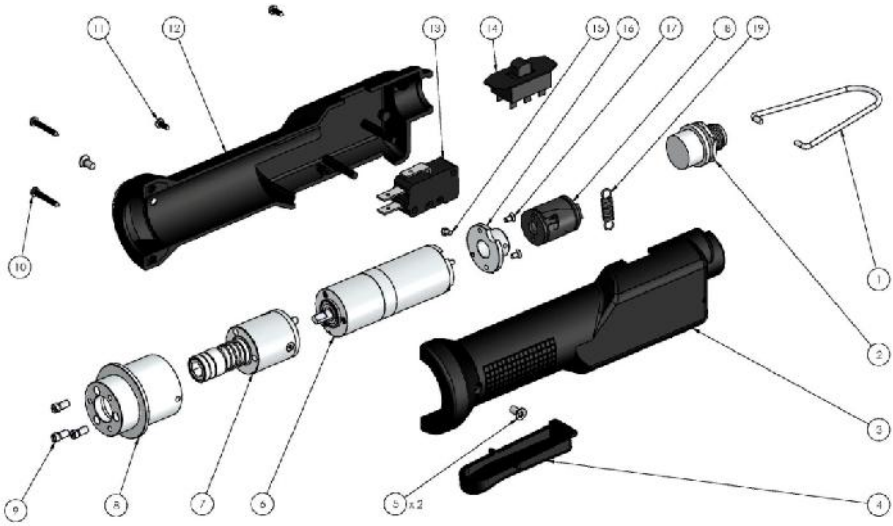

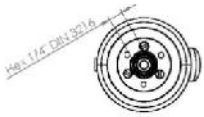

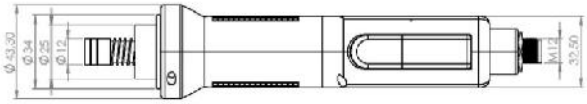

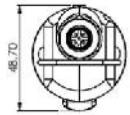

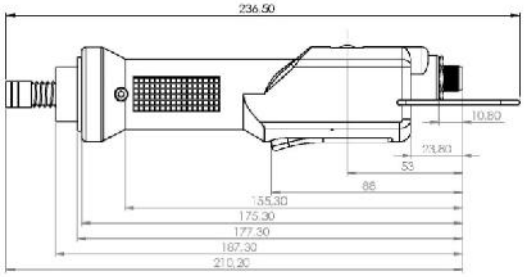

Vers. 160920

PARTI DI RICAMBIO/ *SPARE PARTS*

RIF	DESCRIZIONE/ *DESCRIPTION*	COD.
1	Gancio/ *Hook*	200060
2	Connettore/ *Connector* M 8 pin	201766
3	Impugnatura dx/ *Right housing*	210158/ESD
4	Leva azionamento micro/ *Start lever*	211255/ESD
5	Vite/*Screw* M3x6 (2)	801002
6	Motoriduttore/ *Motor+reduction gears*	231512/05
7	Assemblato alberino/ *Spindle assembled*	250047/KIT
8	Flangia/ *Flange*	250134
9	Vite/ *Screw* M3x8 (3)	801008
10	Vite/ *Screw* 2,2x16 (2)	220059
11	Vite/*Screw* 2,2x13 (2)	210059
12	Impugnatura sx / *Left housing*	210154/ESD
13	Microswitch	201056
14	Interruttore reversibilità/ *Reverse switch*	200057
15	Vite/ Screw 2x4 (2)	801004
16	Staffa encoder/ *Encoder bracket*	250132
17	Vite/ *Screw* M2x4 TX6 (2)	231531
18	Encoder	250041
19	Molla leva/ Lever *spring*	211061
	Cavo/ *Cable* 8 pin 2,5 mt.	250063/N

Vers. 160920

NATO50CA/TA: ESPLOSO/ *EXPLODED VIEW* + INGOMBRO/ *DRAWING*

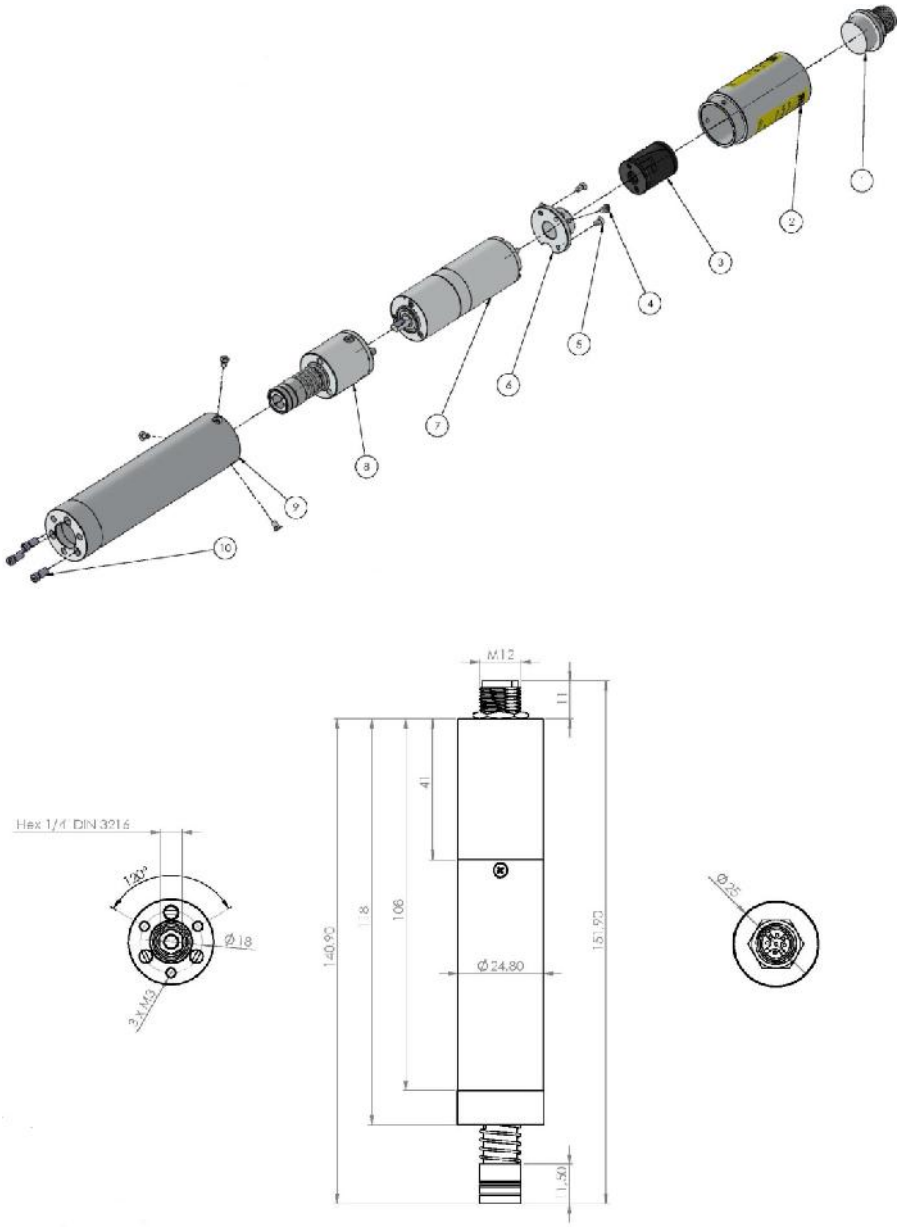

Vers. 160920

PARTI DI RICAMBIO/ *SPARE PARTS*

RIF	DESCRIZIONE/ *DESCRIPTION*	COD.
1	Connettore/ *Connector* M 8 pin	201766
2	Coperchio/ *Cup*	250130
3	Encoder	250041
4	Vite/ *Screw* M2x4 (2)	801004
5	Vite/ *Screw* M2x4 TX6 (5)	231531
6	Staffa encoder/ *Encoder bracket*	250132
7	Motoriduttore/ *Motor+reduction gears*	231512
8	Assemblato alberino/ *Spindle assembled*	250047/KIT
9	Corpo/ *Aluminium body*	250131
10	Vite/ *Screw* M3x8 (3)	801008
	Cavo/ *Cable* 8 pin 2,5 mt.	250063/N